HERRING RIVER
CAPE COD BOAT RAMP STORMWATER RETROFIT PROJECT - PERMITTING PLANS
HARWICH, MA
NOVEMBER 2023

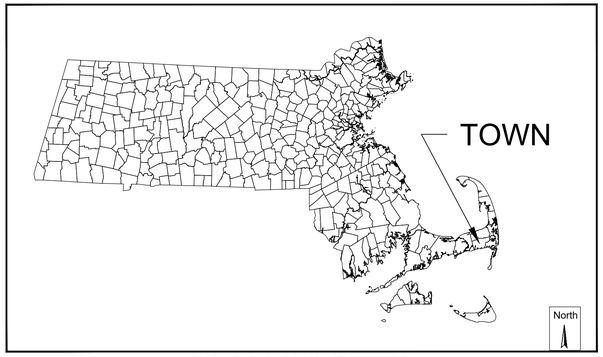

MASSACHUSETTS
Graphic Scale
0 150000
SCALE IN FEET
1:150000

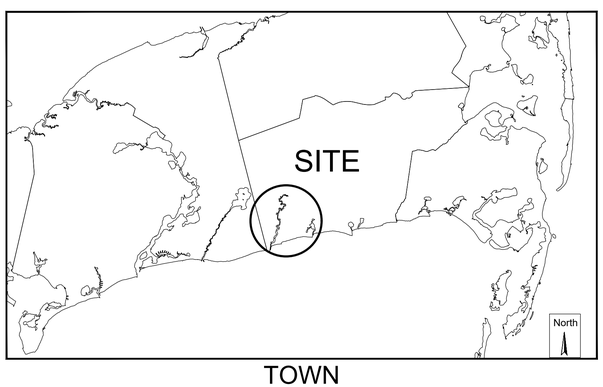

TOWN
Graphic Scale
0 12000
SCALE IN FEET
1:12000

LOCUS
Graphic Scale
1-inch = 500-feet

Sheet List Table	
Sheet Number	Sheet Title
1	COVER SHEET
2	NOTES & LEGEND
3	DEMOLITION AND EROSION CONTROL PLAN
4	SITE AND GRADING PLAN
5	DETAILS
6	PLANTING PLAN
7	PLANTING DETAILS

GENERAL NOTES:
1. SURVEY CONDUCTED BY HORSLEY WITTEN GROUP FEBRUARY, 2023.
2. HORIZONTAL DATUM IS MASS STATE PLANE COORDINATE SYSTEM.
3. DATUM ESTABLISHED BY GPS RTK. THE ELEVATIONS DEPICTED HEREON WERE BASED ON THE NORTH AMERICAN VERTICAL DATUM (NAVD) OF 1988.
4. THE PROPERTY LINES AND RIGHTS OF WAYS DEPICTED ARE APPROXIMATE ONLY.
5. ABUTTER INFORMATION FROM ASSESSOR'S MAP.
6. SITE INFORMATION:
   ADDRESS: 157 ROUTE 28 HARWICH,MA
   ZONING DISTRICT: RESIDENTIAL - LOW DENSITY
7. THE PROPERTY IS LOCATED WITHIN F.I.R.M ZONE X AS SHOWN ON COMMUNITY PANEL NO. 25001C0518J DATED JULY 16, 2014.
8. THE WETLAND DELINEATION SHOWN HEREON WAS CONDUCTED BY THE HORSLEY WITTEN GROUP, INC. ON DECEMBER 28, 2022.

PERMITTING SET ONLY
NOT FOR CONSTRUCTION

Plan Set:
HERRING RIVER
CAPE COD BOAT RAMP STORMWATER RETROFIT PROJECT - PERMITTING PLANS
HARWICH, MA

Prepared For:
Town of Harwich
732 Main Street
Harwich, MA
(508) 430-7514

Prepared By:
Horsley Witten Group, Inc.
Sustainable Environmental Solutions
www.horsleywitten.com

Headquarters
90 Route 6A
Sandwich, MA 02563
(508) 833-6600 voice
(508) 833-3150 fax

294 Washington Street, Suite 801
Boston, MA 02108
(857) 263-8193 voice
(617) 574-4799 fax

55 Dorrance Street, Suite 200
Providence, RI 02906
(401) 272-1717 voice
(401) 439-8368 fax

113 Water Street, R2
Exeter, NH 03833
(603) 658-1660

Registration:
COMMONWEALTH OF MASSACHUSETTS
RICHARD A. CLAYTOR
CIVIL
NO. 45116
REGISTERED PROFESSIONAL ENGINEER
11-17-2023

Revisions

Rev.	Date	By	Appr.	Description
1				
2				
3				
4				
5				
6				
7				

Project Number: 22032
Sheet Number: 1 of 7
Drawing Number: C - 1

last modified: 11/17/23 printed: 11/17/23 by ml H:\Projects\2022\22032 CC Boat Ramp SW Retrofits\Drawings\HERRING RIVER\22032 HERRING RIVER CV.dwg

GENERAL CONSTRUCTION NOTES:

1. ALL SITE WORK TO COMPLETE THIS PROJECT AS INDICATED ON THE DRAWINGS AND IN THE SPECIFICATIONS IS THE SOLE RESPONSIBILITY OF THE CONTRACTOR.
2. IMMEDIATELY CONTACT AND COORDINATE WITH THE ENGINEER AND OWNER IF ANY DEVIATION OR ALTERATION OF THE WORK PROPOSED ON THESE DRAWINGS IS REQUIRED.
3. UTILIZE ALL PRECAUTIONS AND MEASURES TO ENSURE THE SAFETY OF THE PUBLIC, ALL PERSONNEL AND PROPERTY DURING CONSTRUCTION IN ACCORDANCE WITH OSHA STANDARDS, INCLUDING THE INSTALLATION OF TEMPORARY FENCING BARRICADES, SAFETY LIGHTING, CONES, POLICE DETAIL AND/OR FLAGMEN AS DETERMINED NECESSARY BY THE TOWN. THE CONTRACTOR IS RESPONSIBLE FOR THE COST OF POLICE DETAIL AND FOR COORDINATING WITH THE LOCAL OR STATE POLICE DEPARTMENT FOR ALL REQUIRED POLICE DETAIL.
4. MAKE ALL NECESSARY CONSTRUCTION NOTIFICATIONS AND APPLY FOR AND OBTAIN ALL NECESSARY CONSTRUCTION PERMITS, PAY ALL FEES INCLUDING POLICE DETAILS AND POST ALL BONDS, IF NECESSARY, ASSOCIATED WITH THE SAME, AND COORDINATE WITH THE OWNER AND THE ENGINEER.
5. ALL EXISTING CONDITIONS SHOWN ARE APPROXIMATE AND ARE BASED ON THE BEST INFORMATION AVAILABLE. PRIOR TO THE START OF CONSTRUCTION VERIFY THAT THE PROPOSED IMPROVEMENTS SHOWN ON THE PLANS DO NOT CONFLICT WITH ANY KNOWN EXISTING OR OTHER PROPOSED IMPROVEMENTS. IF ANY CONFLICTS ARE DISCOVERED, NOTIFY THE OWNER AND THE ENGINEER PRIOR TO INSTALLING ANY PORTION OF THE SITE WORK WHICH WOULD BE AFFECTED.
6. THE LOCATION AND/OR ELEVATION OF EXISTING UTILITIES AND STRUCTURES AS INDICATED ON THE DRAWINGS ARE BASED ON RECORDS OF VARIOUS UTILITY COMPANIES, AND WHEREVER POSSIBLE, MEASUREMENTS TAKEN IN THE FIELD. THIS INFORMATION IS NOT TO BE RELIED UPON AS BEING EXACT OR COMPLETE. VERIFY THE LOCATION OF ALL UNDERGROUND UTILITIES AND STRUCTURES IN THE FIELD PRIOR TO THE START OF CONSTRUCTION. CONTACT THE APPROPRIATE UTILITY COMPANY, ANY GOVERNING PERMITTING AUTHORITY IN THE TOWN, AND "DIGSAFE" (1-888-344-7233) AT LEAST THREE BUSINESS DAYS PRIOR TO ANY EXCAVATION WORK TO REQUEST EXACT FIELD LOCATION OF UTILITIES. THE CONTRACTOR MUST RESOLVE CONFLICTS BETWEEN THE PROPOSED UTILITIES AND FIELD-LOCATED UTILITIES AND REPORT ANY DISCREPANCIES TO THE ENGINEER IMMEDIATELY. THE ENGINEER ASSUMES NO RESPONSIBILITY FOR DAMAGES INCURRED AS A RESULT OF UTILITIES OMITTED, INCOMPLETELY OR INACCURATELY SHOWN. THE CONTRACTOR MUST MAINTAIN ACCURATE RECORDS OF THE LOCATION AND ELEVATION OF ALL WORK INSTALLED AND EXISTING UTILITIES FOUND DURING CONSTRUCTION FOR THE PREPARATION OF THE AS-BUILT PLAN.
7. IMPORT ONLY CLEAN MATERIAL. MATERIAL FROM AN EXISTING OR FORMER 21E SITE AS DEFINED BY THE MASSACHUSETTS CONTINGENCY PLAN 310 CMR 40.0000 WILL NOT BE ACCEPTED .
8. IT IS THE RESPONSIBILITY OF THE CONTRACTOR TO ESTABLISH AND MAINTAIN ALL CONTROL POINTS AND BENCHMARKS DURING CONSTRUCTION INCLUDING BENCHMARK LOCATIONS AND ELEVATIONS AT CRITICAL AREAS. COORDINATE WITH THE ENGINEER THE LOCATION OF ALL CONTROL POINTS AND BENCHMARKS.
9. SITE LAYOUT SURVEY REQUIRED FOR CONSTRUCTION MUST BE PROVIDED BY THE CONTRACTOR AND PERFORMED BY A MASSACHUSETTS' REGISTERED PROFESSIONAL LAND SURVEYOR. THE CONTRACTOR IS RESPONSIBLE FOR COORDINATING WITH THE SURVEYOR FOR ALL SITE SURVEY WORK.
10. MAINTAIN ALL GRADE STAKES SET BY THE SURVEYOR. GRADE STAKES ARE TO REMAIN UNTIL A FINAL INSPECTION OF THE ITEM HAS BEEN COMPLETED BY THE ENGINEER. RE-STAKING OF PREVIOUSLY SURVEYED SITE FEATURES IS THE RESPONSIBILITY (INCLUDING COST) OF THE CONTRACTOR.
11. UNLESS OTHERWISE INDICATED ON THE DRAWINGS AND/OR IN THE SPECIFICATIONS, ALL SITE CONSTRUCTION MATERIALS AND METHODOLOGIES ARE TO CONFORM TO THE MOST RECENT VERSION OF THE MASSACHUSETTS DEPARTMENT OF TRANSPORTATION STANDARD SPECIFICATIONS (THE COMMONWEALTH OF MASSACHUSETTS DEPARTMENT OF TRANSPORTATION SPECIFICATIONS FOR HIGHWAY AND BRIDGES 2020 EDITION, AND THE SUPPLEMENTAL SPECIFICATIONS DATED JUNE 30, 2020).
12. PROVIDE ALL CONSTRUCTION SERVICE IN ACCORDANCE WITH APPLICABLE LAWS AND REGULATIONS REGARDING NOISE, VIBRATION, DUST, SEDIMENTATION CONTAINMENT, AND TRENCH WORK.
13. COLLECT SOLID WASTES AND STORE IN A SECURED DUMPSTER. THE DUMPSTER MUST MEET ALL LOCAL AND STATE SOLID WASTE MANAGEMENT REGULATIONS.
14. RESTORE ALL SURFACES EQUAL TO THEIR ORIGINAL CONDITION AFTER CONSTRUCTION IS COMPLETE PER SPECIFICATIONS. LEAVE ALL AREAS NOT DISTURBED BY CONSTRUCTION IN THEIR NATURAL STATE. TAKE CARE TO PREVENT DAMAGE TO SHRUBS, TREES, OTHER LANDSCAPING AND/OR NATURAL FEATURES. WHEREAS THE PLANS DO NOT SHOW ALL LANDSCAPE FEATURES, EXISTING CONDITIONS MUST BE VERIFIED BY THE CONTRACTOR IN ADVANCE OF THE WORK.
15. LEDGE OR BOULDER EXCAVATION IS NOT ANTICIPATED FOR THIS SITE.
16. REGULARLY INSPECT THE PERIMETER OF THE PROPERTY TO CLEAN UP AND REMOVE LOOSE CONSTRUCTION DEBRIS BEFORE IT LEAVES THE SITE. PROMPTLY REMOVE ALL DEMOLITION DEBRIS FROM THE SITE TO AN APPROVED DUMP SITE.
17. ALL TRUCKS LEAVING THE SITE MUST BE COVERED.
18. DO NOT WASH ANY CONCRETE TRUCKS ONSITE. REMOVE BY HAND ANY CEMENT OR CONCRETE DEBRIS LEFT IN THE DISTURBED AREA.
19. BURIAL OF ANY STUMPS, SOLID DEBRIS, AND/OR STONES/BOULDERS ONSITE IS PROHIBITED. DO NOT USE ROAD SALT OR OTHER DE-ICING CHEMICALS ON THE ACCESS ROADWAY.
20. AT THE END OF CONSTRUCTION, REMOVE ALL CONSTRUCTION DEBRIS AND SURPLUS MATERIALS FROM THE SITE AS INDICATED IN THE SPECIFICATIONS. PERFORM A THOROUGH INSPECTION OF THE WORK PERIMETER. COLLECT AND REMOVE ALL MATERIALS AND BLOWN OR WATER CARRIED DEBRIS FROM THE SITE.

GENERAL DEMOLITION NOTES:

THIS PLAN SET DOES NOT INCLUDE DETAILS & SPECIFICATIONS FOR ALL DEMOLITION WORK REQUIRED WITHIN THE PROPOSED CONSTRUCTION LIMITS. IT IS THE CONTRACTOR'S RESPONSIBILITY TO COORDINATE WITH THE OWNER AND PROJECT ENGINEER INVOLVED WITH THE PROPOSED NEW CONSTRUCTION TO DEVELOP A SUITABLE DEMOLITION PLAN.

1. UNLESS OTHERWISE NOTED, THE CONTRACTOR IS RESPONSIBLE FOR THE RELOCATION, DEMOLITION, REMOVAL AND DISPOSAL, IN A LOCATION APPROVED BY ALL GOVERNING AUTHORITIES, OF ALL EXISTING SITE ELEMENTS AND STRUCTURES INCLUDING, BUT NOT LIMITED TO ROADWAYS, PARKING AREAS, BITUMINOUS CONCRETE, CEMENT CONCRETE, GRAVEL, CURBS, WALKWAYS, BERMS, POSTS, TREES, SHRUBS, DRAINAGE STRUCTURES AND ALL OTHER STRUCTURES SHOWN AND NOT SHOWN WITHIN CONSTRUCTION LIMITS, AND WHERE NEEDED, TO ALLOW FOR NEW CONSTRUCTION. ALL FACILITIES TO BE REMOVED ARE TO BE UNDERCUT TO SUITABLE MATERIAL AND BROUGHT TO GRADE WITH SUITABLE COMPACTED FILL MATERIAL PER SPECIFICATIONS.
2. PRIOR TO DEMOLITION OCCURRING, ALL EROSION CONTROL DEVICES ARE TO BE INSTALLED.
3. REMOVE ALL DEBRIS FROM THE SITE AND DISPOSE OF THE DEBRIS IN A PROPER AND LEGAL MANNER.
4. OBTAIN ALL PERMITS REQUIRED FOR DEMOLITION AND DISPOSAL.
5. COORDINATE WITH THE TOWN OF HARWICH ON ACCESS CLOSURE DATES AND NOTIFICATIONS.

BASIC CONSTRUCTION SEQUENCE:

THE FOLLOWING CONSTRUCTION SEQUENCE IS TO BE USED AS A GENERAL GUIDELINE. COORDINATE WITH THE OWNER, ENGINEERS, AND LANDSCAPE ARCHITECT AND SUBMIT A PROPOSED CONSTRUCTION SEQUENCE FOR REVIEW AND APPROVAL PRIOR TO CONSTRUCTION.

1. SURVEY AND STAKE THE PROPOSED LIMIT OF DISTURBANCE AND LIMIT OF SEDIMENTATION BARRIERS.
2. PLACE SEDIMENTATION BARRIERS AS INDICATED ON DRAWINGS AND STAKED OUT IN THE FIELD. UNDER NO CIRCUMSTANCES IS THE LIMIT OF WORK TO EXTEND BEYOND THE SEDIMENTATION BARRIERS/LIMIT OF DISTURBANCE AS INDICATED ON DRAWINGS AS APPROVED BY THE LOCAL CONSERVATION COMMISSION AND DEPARTMENT OF ENVIRONMENTAL PROTECTION (DEP).
3. INSTALL TEMPORARY CONSTRUCTION ENTRANCE(S) AS INDICATED ON DRAWINGS. NO OTHER ENTRANCES ARE TO BE USED TO ACCESS TO THE SITE BY ANY CONSTRUCTION OR DELIVERY VEHICLES.
4. BEGIN CLEARING THE SITE AS REQUIRED.
5. SURVEY AND STAKE CENTERLINE OF THE PROPOSED DRIVEWAYS AND STORMWATER MANAGEMENT AREAS.
6. TEMPORARILY STABILIZE/SEED DISTURBED AREAS AS NECESSARY TO REDUCE SIDE SLOPE EROSION AND SEDIMENT ACCUMULATION.
7. COORDINATE THE CONSTRUCTION OF BIORETENTIONS WITH TIDAL CYCLES AND CONSTRUCT DIVERSIONS AS NECESSARY TO PREVENT SALT WATER INUNDATION BEFORE THE AREAS ARE ESTABLISHED.
8. BEGIN CLEARING AND GRUBBING THE STORMWATER MANAGEMENT AREAS. TOPSOIL IS TO BE STRIPPED FROM THE AREA OF THE PROPOSED STORMWATER MANAGEMENT AREAS AND STOCKPILED IN APPROVED LOCATIONS. TOPSOIL STOCKPILES MUST BE PROTECTED BY A SEDIMENT BARRIER.
9. INSTALL TEMPORARY CONVEYANCE DEVICES (SWALES, CHECK DAMS, PIPES, ETC.) AS NECESSARY TO CONVEY RUNOFF TO TEMPORARY SEDIMENT TRAPS AND BASINS.
10. PERMANENTLY SEED ALL DISTURBED AREAS OUTSIDE OF THE AREA TO BE PAVED.
11. BEGIN ROUGH GRADING IN ACCORDANCE WITH THE CONSTRUCTION DOCUMENTS AND IN ACCORDANCE WITH APPLICABLE STATE AND LOCAL REGULATIONS AS SOON AS POSSIBLE AFTER DISTURBING THE SOIL.
12. BEGIN DRIVEWAY AND PARKING CONSTRUCTION PER SITE PLANS AND IN ACCORDANCE WITH APPLICABLE STATE AND LOCAL REGULATIONS.
13. FINISH PERMANENT STABILIZATION. COMPLETE PERMANENT STORMWATER MANAGEMENT AREA SEEDING AND PLANTING AFTER THE CONTRIBUTING AREA TO THE BASIN HAS REACHED A MINIMUM OF 80% STABILIZATION AND IS NO LONGER REQUIRED AS A CONSTRUCTION SEDIMENTATION BASIN.
14. COMPLETE ALL REMAINING PLANTING AND SEEDING.
15. SWEEP THE ROADWAY TO REMOVE ALL SEDIMENTS.
16. ENGINEER TO APPROVE THE REMOVAL OF ALL TEMPORARY SOIL EROSION AND SEDIMENTATION CONTROL MEASURES FOLLOWING VEGETATIVE ESTABLISHMENT OF ALL DISTURBED AREAS AND DETERMINE WHEN THE CONTRIBUTING AREA HAS REACHED A MINIMUM OF 80% STABILIZATION.

GENERAL GRADING AND DRAINAGE NOTES:

1. ALL CUT AND FILL SLOPES SHALL BE 3:1 OR FLATTER UNLESS OTHERWISE NOTED.
2. EXISTING GRADE CONTOUR INTERVALS SHOWN AT 1 FOOT.
3. PROPOSED GRADE CONTOUR INTERVALS SHOWN AT 1 FOOT.
4. ADJUST AND/OR CUT EXISTING PAVEMENT AS NECESSARY TO ASSURE A SMOOTH FIT AND CONTINUOUS GRADE.
5. PROPOSED ELEVATIONS ARE SHOWN TO FINISH PAVEMENT OR GRADE UNLESS NOTED OTHERWISE.
6. ALL EARTHWORK AND SITE PREPARATION MUST BE DONE IN STRICT ACCORDANCE WITH THE RECOMMENDATIONS OF ANY SUBSURFACE INVESTIGATION OR GEOTECHNICAL REPORTS PREPARED FOR THIS SITE.

DEWATERING:

1. IT IS LIKELY THAT DEWATERING WILL BE NECESSARY DURING CONSTRUCTION AT THS SITE. IMPLEMENT THE PROPER PRACTICES AND STRUCTURAL MEASURES TO PREVENT EROSION OR SEDIMENT TRANSPORTATION, PARTICULARLY TO THE RESOURCE AREA. THESE MEASURES TYPICALLY INCLUDE BUT ARE NOT LIMITED TO: DEWATERING BAGS, TEMPORARY STRAWBALES, SILT FENCES, SILT SOCKS AND/OR OTHER APPROVED DEVICES.
2. PRIOR TO ANY DEWATERING ACTIVITIES, THE PROPOSED PLAN MUST BE APPROVED BY THE ENGINEER AND THE TOWN OF HARWICH.

EROSION & SEDIMENT CONTROL NOTES:

1. DESIGNATE THE SITE CONSTRUCTION FOREMAN AS THE ON-SITE PERSONNEL RESPONSIBLE FOR THE DAILY INSPECTION AND MAINTENANCE OF ALL SEDIMENT AND EROSION CONTROLS AND IMPLEMENTATION OF ALL NECESSARY MEASURES TO CONTROL EROSION AND PREVENT SEDIMENT FROM LEAVING THE SITE.
2. INSTALL ALL EROSION AND SEDIMENT CONTROL (ESC) MEASURES AS INDICATED ON DRAWINGS IN CONSULTATION WITH THE CONSERVATION AGENT, AND ENGINEER BEFORE ANY CONSTRUCTION ACTIVITIES BEGIN. INSPECT, MAINTAIN REPAIR AND REPLACE EROSION CONTROL MEASURES, AS NECESSARY, DURING THE ENTIRE CONSTRUCTION PERIOD OF THE PROJECT. THE SITE PERIMETER EROSION CONTROLS ARE THE DESIGNATED LIMIT OF WORK. INFORM ALL PERSONNEL WORKING ON THE PROJECT SITE THAT NO CONSTRUCTION ACTIVITY IS TO OCCUR BEYOND THE LIMIT OF WORK AT ANY TIME THROUGHOUT THE CONSTRUCTION PERIOD.
3. MAINTAIN A MINIMUM SURPLUS OF 100 FEET OF EROSION CONTROL BARRIER (SILT SOCK) ONSITE AT ALL TIMES.
4. PROTECT THE ADJACENT RESOURCE AREA FROM SEDIMENTATION DURING PROJECT CONSTRUCTION UNTIL ACCEPTANCE BY THE OWNER & IN CONFORMANCE WITH THE ORDER OF CONDITIONS.
5. PROVIDE CONSTRUCTION EXIT(S) AS INDICATED ON DRAWINGS TO SHED DIRT FROM CONSTRUCTION VEHICLE TIRES. CLEAN AND/OR REPLACE THE CRUSHED STONE PAD, AS NECESSARY, TO MAINTAIN ITS EFFECTIVENESS.
6. KEEP THE LIMIT OF CLEARING, GRADING AND DISTURBANCES TO A MINIMUM WITHIN THE PROPOSED AREA OF CONSTRUCTION. PHASE THE SITE WORK IN A MANNER TO MINIMIZE AREAS OF EXPOSED SOIL. IF TREES ARE TO BE CUT ON THE ENTIRE SITE, CLEAR AND GRUB ONLY THOSE AREAS WHICH ARE ACTIVELY UNDER CONSTRUCTION. PROPERLY INSTALL THE SEDIMENTATION CONTROLS PRIOR TO BEGINNING ANY LAND CLEARING ACTIVITY AND/OR OTHER CONSTRUCTION RELATED WORK.
7. MONITOR LOCAL WEATHER REPORTS AND TIDES DURING CONSTRUCTION AND PRIOR TO SCHEDULING EARTHMOVING OR OTHER CONSTRUCTION ACTIVITIES WHICH LEAVE LARGE DISTURBED AREAS UNSTABILIZED. IF INCLEMENT WEATHER IS PREDICTED, USE BEST PROFESSIONAL JUDGEMENT AND GOOD CONSTRUCTION PRACTICES WHEN SCHEDULING CONSTRUCTION ACTIVITIES AND ENSURE THE NECESSARY EROSION CONTROL DEVICES ARE INSTALLED AND FUNCTIONING PROPERLY TO MINIMIZE EROSION FROM ANY IMPENDING WEATHER EVENTS.
8. INSPECT EROSION AND SEDIMENT CONTROL DEVICES AND STABILIZED SLOPES ON A WEEKLY BASIS AND AFTER EACH RAINFALL EVENT OF .25 INCH OR GREATER. REPAIR IDENTIFIED PROBLEMS WITHIN 24 HOURS TO ENSURE EROSION AND SEDIMENT CONTROLS ARE IN GOOD WORKING ORDER. RESET OR REPLACE MATERIALS AS REQUIRED.
9. SURROUND THE PERIMETER OF SOIL STOCKPILES WITH SILT SOCK, SILT FENCE, STRAWBALES, OR A COMBINATION OF SILT FENCE WITH STRAWBALE, AS DETERMINED NECESSARY.
10. DISTURBED AREAS AND SLOPES MUST NOT BE LEFT UNATTENDED OR EXPOSED FOR EXCESSIVE PERIODS OF TIME SUCH AS THE INACTIVE WINTER SEASON. PROVIDE APPROPRIATE STABILIZATION PRACTICES ON ALL DISTURBED AREAS AS SOON AS POSSIBLE BUT NOT MORE THAN 14 DAYS AFTER THE CONSTRUCTION ACTIVITY IN THAT AREA HAS TEMPORARILY OR PERMANENTLY CEASED, REINFORCE TEMPORARY AREAS HAVING A SLOPE GREATER THAN 2:1 WITH EROSION BLANKETS OR APPROVED EQUAL UNTIL THE SITE IS PROPERLY STABILIZED. TEMPORARY SWALES MAY ALSO BE REQUIRED IF DETERMINED NECESSARY IN THE FIELD BY THE ENGINEER.
11. UPON THE INSTALLATION OF EACH OVERFLOW STRUCTURE, INSTALL A SILT SACK OR APPROVED EQUIVALENT. INSPECT SILT SACKS, AFTER EACH SIGNIFICANT STORM EVENT AND REMOVE AND EMPTY AS NEEDED FOR THE DURATION OF THE CONSTRUCTION PERIOD.
12. ADDITIONAL SMALL SEDIMENTATION BASINS MAY BE CONSTRUCTED ON AN AS-NEEDED BASIS DURING CONSTRUCTION TO AID IN THE CAPTURE OF SITE RUNOFF AND SEDIMENT. IT WILL BE THE RESPONSIBILITY OF THE SITE CONTRACTOR, IN CONSULTATION WITH THE ENGINEER, TO SIZE AND CREATE THESE BASINS IN APPROPRIATE LOCATIONS.
13. CONTAIN ALL SEDIMENT ONSITE. SWEEP ALL EXITS FROM THE SITE AS NECESSARY INCLUDING ANY SEDIMENT TRACKING. SWEEP PAVED AREAS AS NEEDED TO REMOVE SEDIMENT AND POTENTIAL POLLUTANTS ACCUMULATED DURING SITE CONSTRUCTION.
14. REMOVE ACCUMULATED SEDIMENT FROM ALL TEMPORARY PRACTICES AND DISPOSE OF IN A PRE-APPROVED LOCATION.
15. PROVIDE ON SITE OR MAKE READILY AVAILABLE THE NECESSARY EQUIPMENT AND SITE PERSONNEL DURING CONSTRUCTION HOURS FOR THE DURATION OF THE PROJECT TO ENSURE ALL EROSION AND SEDIMENTATION CONTROL DEVICES ARE PROPERLY MAINTAINED AND REPAIRED IN A TIMELY AND RESPONSIBLE MANNER. IF SITE WORK IS SUSPENDED DURING THE WINTER MONTHS THE CONTRACTOR MUST CONTINUE TO PROVIDE PERSONNEL AND EQUIPMENT EITHER ON SITE OR READILY AVAILABLE TO PROPERLY MAINTAIN AND REPAIR ALL EROSION AND SEDIMENTATION CONTROL DEVICES IN A TIMELY AND RESPONSIBLE MANNER
16. CONTROL DUST BY WATERING OR OTHER APPROVED METHODS AS NECESSARY, OR AS DIRECTED BY THE ENGINEER.
17. THE CONTRACTOR IS RESPONSIBLE FOR THE INSPECTION AND MAINTENANCE DURING CONSTRUCTION OF ALL STORMWATER FACILITIES INSTALLED OR AFFECTED BY THE PROJECT. REMOVE SEDIMENT OR DEBRIS COLLECTED WITHIN THESE FACILITIES FROM THE PROJECT WORK PRIOR TO THE OWNER'S ACCEPTANCE.

STORMWATER FACILITY OPERATION & MAINTENANCE:

THE CONTRACTOR IS RESPONSIBLE FOR THE PROPER INSPECTION AND MAINTENANCE OF ALL STORMWATER MANAGEMENT FACILITIES AS OUTLINED BELOW DURING CONSTRUCTION AND UNTIL SUCH TIME THAT THE ROADWAYS AND ASSOCIATED UTILITIES ARE ACCEPTED BY THE OWNER AND THE ENGINEER.

1. INSPECT AND RESTORE/CLEAN ALL FACILITIES (INLETS, FOREBAYS, AND BIORETENTION AREAS AS DESCRIBED BELOW OF SEDIMENT AND DEBRIS PRIOR TO THE OWNER'S ACCEPTANCE.
2. REMOVE AND DISPOSE ALL SEDIMENT AND DEBRIS TO A PRE-APPROVED LOCATION.
3. REFER TO THE OPERATIONS AND MAINTENANCE PLAN, INCLUDED WITH THE STORMWATER REPORT, FOR ADDITIONAL REQUIREMENTS AND INSPECTION CHECKLIST TEMPLATES.
4. AT A MINIMUM INSPECT MONTHLY AND AFTER STORM EVENTS GREATER THAN OR EQUAL TO 1" OF RAINFALL AS NECESSARY FOR THE ENTIRE DURATION OF THE CONSTRUCTION PROJECT AND THE FIRST 3 MONTHS AFTER CONSTRUCTION TO ENSURE PROPER STABILIZATION.
5. SPECIFIC MAINTENANCE REQUIRED DURING CONSTRUCTION:
   - A. DRAINAGE STRUCTURES (INLETS, OVERFLOW STRUCTURES): MONITOR AND REGULARLY INSPECT ALL EXISTING AND PROPOSED DRAINAGE STRUCTURES FOR PROPER OPERATION, COLLECTION OF LITTER OR TRASH, AND STRUCTURAL DETERIORATION. CLEAN AND REMOVE SEDIMENT FRO THE STRUCTURES (INCLUDING SUMPS) AS NECESSARY, AND REPAIR WHEN REQUIRED.
   - B. SEDIMENT FOREBAY: REGULARLY INSPECT TO ENSURE PROPER FUNCTION. REMOVE SEDIMENT BUILD-UP ON THE FLOOR OF THE FOREBAY AND PROPERLY DISPOSE AS NECESSARY, TO LIMIT CLOGGING. CLEAN SEDIMENT FOREBAYS PRIOR TO COMPLETION OF CONSTRUCTION.
   - C. BIORETENTION SYSTEMS: REGULARLY INSPECT TO ENSURE PROPER FUNCTION. MONITOR AND INSPECT STRUCTURAL COMPONENTS, INCLUDING WEIR WALLS, DRAINAGE INLETS, OUTLET STRUCTURES AND SPILLWAYS, FOR PROPER FUNCTION. CLEAN AND REPAIR ANY CLOGGED STRUCTURES DURING INSPECTIONS. PRIOR TO THE COMPLETION OF CONSTRUCTION, REMOVE AND REPLACE ILL-ESTABLISHED, DEAD OR SEVERELY DISEASED PLANTS. REMOVE SEDIMENT BUILD-UP AS NEEDED, AND REPLACE SOIL WHEN NECESSARY. IF SEDIMENT OR ORGANIC DEBRIS BUILD-UP LIMITS THE INFILTRATION CAPABILITIES, REMOVE THE TOP 6" OR GREATER AND SURFACE ROTO-TILLED TO A DEPTH OF 12".
   - D. ROUTINE MAINTENANCE: OTHER ROUTINE MAINTENANCE INCLUDES THE REMOVAL OF TRASH AND LITTER FROM PAVED AND PERIMETER AREAS, AND STREET AND PARKING LOT SWEEPING UPON COMPLETION OF CONSTRUCTION TO AVOID EXCESSIVE ACCUMULATION OF SEDIMENT IN THE DRAINAGE SYSTEM. INSPECT THE PIPES AND STRUCTURES FOR SEDIMENT ACCUMULATION AND PROPER FLOW.

LEGEND:

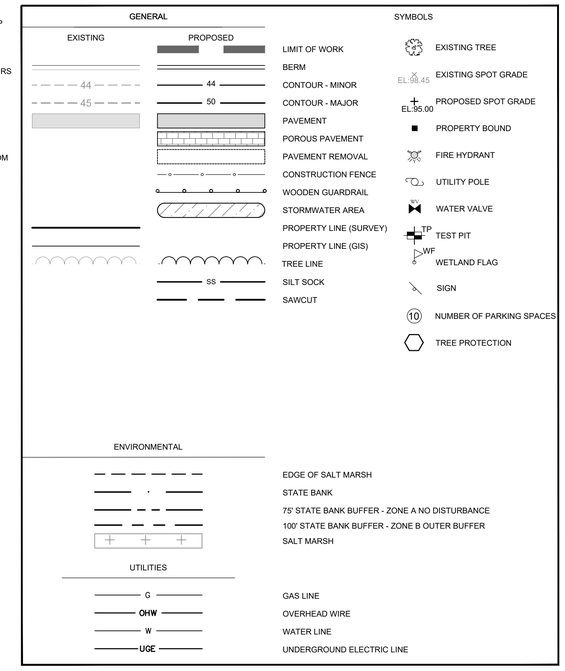

PERMITTING SET ONLY
NOT FOR CONSTRUCTION

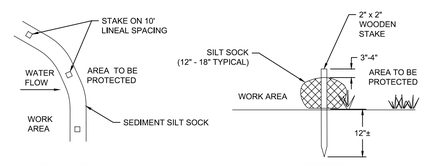

PLAN VIEW **SECTION**

NOTES:
1. SILT SOCK MANUFACTURER TO BE SILT SOXX OR ENGINEER APPROVED EQUAL.
2. ALL MATERIAL TO MEET MANUFACTURER'S SPECIFICATIONS.
3. SEDIMENT SILT SOCK TO BE FILLED WITH LEAF COMPOST AND/OR WOODY MULCH PER MANUFACTURER'S REQUIREMENTS.
4. FOLLOWING CONSTRUCTION AND SITE STABILIZATION, COMPOST MATERIAL TO BE REMOVED OR DISPERSED ON SITE, AS APPROVED BY THE ENGINEER.

SILT SOCK
NOT TO SCALE

INSTALLATION NOTES:
1. PLACE LIFTING STRAPS (NOT INCLUDED) UNDER THE UNIT TO FACILITATE REMOVAL AFTER USAGE
2. UNFOLD DANDY DEWATERING BAG ON STABILIZED AREA OVER DENSE VEGETATION, STRAW, OR GRAVEL (IF AN INCREASED DRAINAGE SURFACE IS NEEDED)
3. INSERT DISCHARGE HOSE FROM PUMP INTO DANDY DEWATERING BAG A MINIMUM OF SIZE INCHES AND TIGHTLY SECURE WITH ATTACHED STRAP TO PREVENT WATER FROM FLOWING OUT OF THE UNIT WITHOUT BEING FILTERED
4. IF USING OPTIONAL ABSORBENTS, PLACE ABSORBENT BOOM INTO THE DANDY DEWATERING BAG

MAINTENANCE:
5. REPLACE THE UNIT WHEN 1/2 FULL OF SEDIMENT OR WHEN SEDIMENT HAS REDUCED THE FLOW RATE OF THE PUMP DISCHARGE TO AN IMPRACTICAL RATE
6. IF USING OPTIONAL OIL ABSORBENTS, REMOVE AND REPLACE ABSORBENT PILLOW WHEN NEAR SATURATION

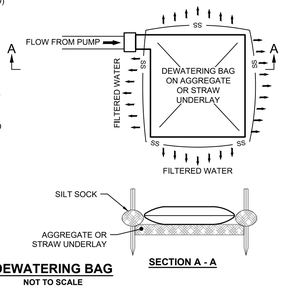

DEWATERING BAG
NOT TO SCALE

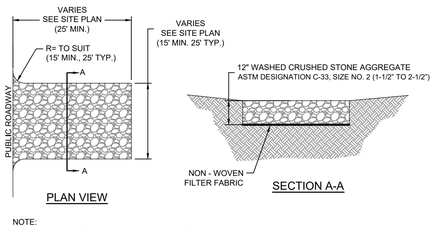

PLAN VIEW SECTION A-A

NOTE:
1. STONE CONSTRUCTION ENTRANCE(S) TO REMAIN UNTIL INSTALLATION OF PAVEMENT SUB-BASE IS TO BEGIN.
2. SEE SITE PLAN FOR LOCATION & ACTUAL DIMENSIONS

CONSTRUCTION ENTRANCE
NOT TO SCALE

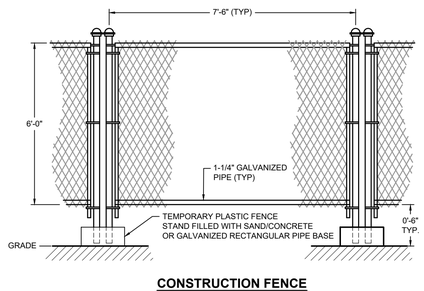

CONSTRUCTION FENCE
NOT TO SCALE

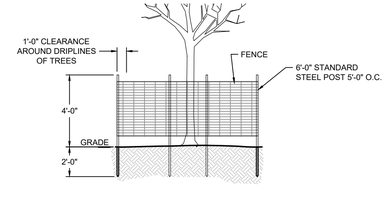

NOTES:
1. FENCING SHALL BE ORANGE RESINET SM60 BARRIER FENCE "SNOW FENCE" OR APPROVED EQUIVALENT.
2. POST SHALL BE HOT ROLLED RAIL STEEL AND FORMED INTO A "T". DIMENSIONS OF "T" POST SECTION, APPROXIMATELY 1 7/16" X 1 5/16" X 1/8" X 6' (SIX FEET) LONG. THE POST SHALL BE PAINTED GREEN OR GALVANIZED.
3. INSTALL FENCE AT TREE DRIPLINES WITHIN THE LIMIT OF WORK WHERE NOTED ON PLANS.

TREE PROTECTION
NOT TO SCALE

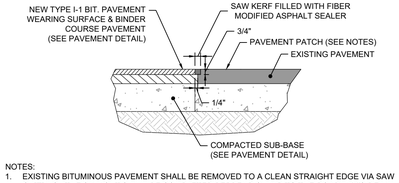

NOTES:
1. EXISTING BITUMINOUS PAVEMENT SHALL BE REMOVED TO A CLEAN STRAIGHT EDGE VIA SAW CUTTING. THE SAW CUT SHALL BE COMPLETED PERPENDICULAR TO THE ROADWAY/SIDEWALK.
2. PRIOR TO INSTALLING THE WEARING COURSE THE EXISTING VERTICAL PAVEMENT SURFACE SHALL BE SWEPT COMPLETELY CLEAN.
3. AFTER PROPER COMPACTION (SEE PAVEMENT DETAIL) SAW CUT NEW PAVEMENT ABUTMENT 3/4" DEEP AND FILL WITH FIBER MODIFIED ASPHALT SEALER AS SHOWN.

SAWCUT & PAVEMENT PATCH
NOT TO SCALE

Revisions

Rev.	Date	By	Appr.	Description

Horsley Witten Group, Inc.
Sustainable Environmental Solutions
www.horsleywitten.com
90 Route 6A
Sandwich, MA 02563
508-833-6600 voice
508-833-3150 fax

Date: NOVEMBER 2023 | Designed By: MDL | Drawn By: MCL | Checked By: GK

Plan Set: HERRING RIVER
CAPE COD BOAT RAMP STORMWATER RETROFIT PROJECT - PERMITTING PLANS
HARWICH, MA

Plan Title: NOTES & LEGEND

Prepared For:
Town of Harwich
732 Main Street
Harwich, MA
Phone: (508) 430-7514
Fax: ----

Survey Provided By:
Horsley Witten Group, Inc.
90 Route 6A
Sandwich, MA 02563
Phone: (508) 833-6600
Fax: (508) 833-3150
Dated: FEBRUARY 7, 2023

Registration:
COMMONWEALTH OF MASSACHUSETTS
RICHARD A. CLAYTOR
CIVIL
NO. 45116
REGISTERED PROFESSIONAL ENGINEER
11-17-2023

Project Number: 22032
Sheet : 2 of 7
Sheet Number: C - 2

last modified: 11/17/23 printed: 11/17/23 by ml H:\Projects\2022\22032 CC Boat Ramp SW Retrofits\Drawings\HERRING RIVER\22032 HERRING RIVER CV.dwg

SURVEY NOTES

1. THE TOPOGRAPHY AND EXISTING SITE CONDITIONS DEPICTED HEREON ARE THE RESULT OF AN ON THE GROUND FIELD SURVEY CONDUCTED BY THE HORSLEY WITTEN GROUP, INC. FEBRUARY 7, 2023.

2. REFERENCE PLAN:
   2.1. "EXISTING CONDITIONS PLAN," BY THE HORSLEY WITTEN GROUP, STAMPED APRIL 20, 2023 BY DANIEL W. MACKENZIE, PLS.

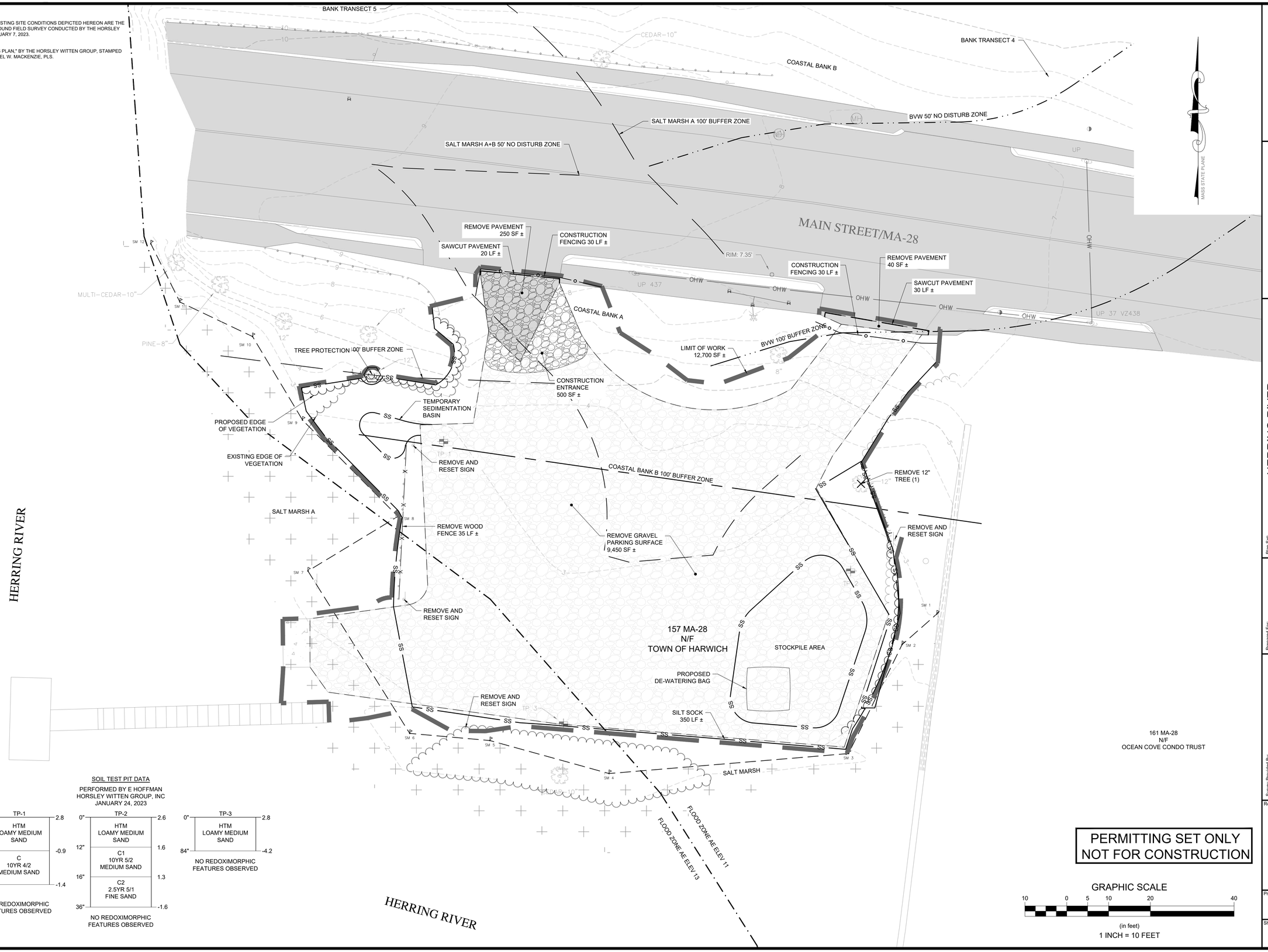

SOIL TEST PIT DATA

PERFORMED BY E HOFFMAN
HORSLEY WITTEN GROUP, INC
JANUARY 24, 2023

TP-1

0"	2.8
HTM LOAMY MEDIUM SAND	
44"	-0.9
C 10YR 4/2 MEDIUM SAND	
50"	-1.4

NO REDOXIMORPHIC FEATURES OBSERVED

TP-2

0"	2.6
HTM LOAMY MEDIUM SAND	
12"	1.6
C1 10YR 5/2 MEDIUM SAND	
16"	1.3
C2 2.5YR 5/1 FINE SAND	
36"	-1.6

NO REDOXIMORPHIC FEATURES OBSERVED

TP-3

0"	2.8
HTM LOAMY MEDIUM SAND	
84"	-4.2

NO REDOXIMORPHIC FEATURES OBSERVED

PERMITTING SET ONLY
NOT FOR CONSTRUCTION

Revisions

Rev.	Date	By	Appr.	Description

Horsley Witten Group, Inc.
Sustainable Environmental Solutions
www.horsleywitten.com
90 Route 6A
Sandwich, MA 02563
508-833-6600 voice
508-833-3150 fax

Date: NOVEMBER 2023 | Designed By: MDL | Drawn By: MCL | Checked By: GK

Plan Set: CAPE COD BOAT RAMP STORMWATER RETROFIT PROJECT - PERMITTING PLANS
HARWICH, MA

Plan Title: DEMOLITION AND EROSION CONTROL PLAN

Prepared For:
Town of Harwich
732 Main Street
Harwich, MA
Phone: (508) 430-7514
Fax: —

Survey Provided By:
Horsley Witten Group, Inc.
90 Route 6A
Sandwich, MA 02563
Phone: (508) 833-6600
Fax: (508) 833-3150
Datlest: FEBRUARY 7, 2023

Registration:
COMMONWEALTH OF MASSACHUSETTS
RICHARD A. CLAYTOR
CIVIL
NO. 45116
REGISTERED PROFESSIONAL ENGINEER
11-17-2023

Project Number: 22032
Sheet: 3 of 7
Sheet Number: C - 3

last modified: 11/17/23 printed: 11/17/23 by ml H:\Projects\2022\22032 CC Boat Ramp SW Retrofits\Drawings\HERRING RIVER\22032 HERRING RIVER ESC.dwg

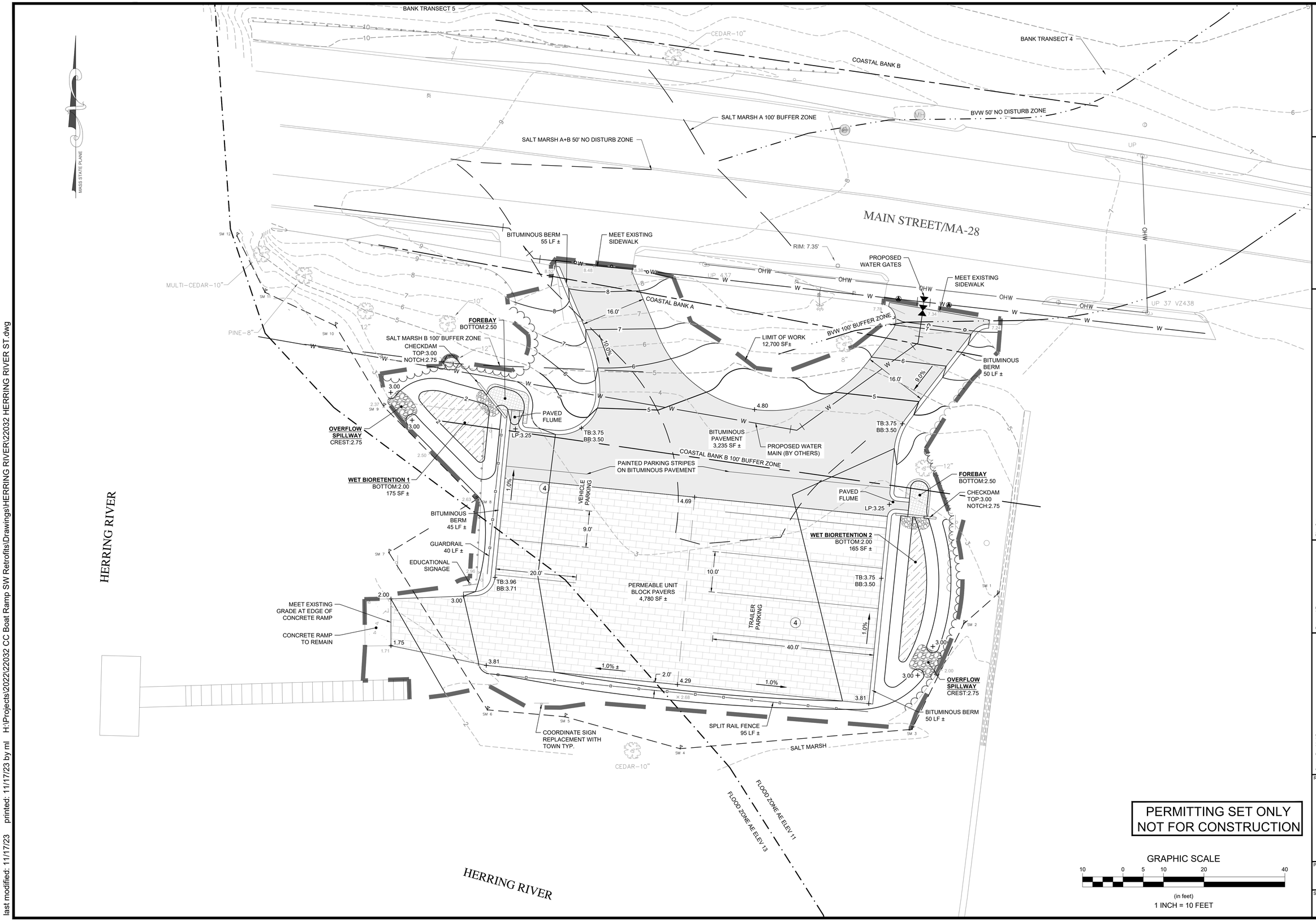

PERMITTING SET ONLY
NOT FOR CONSTRUCTION

GRAPHIC SCALE
10 0 5 10 20 40
(in feet)
1 INCH = 10 FEET

Revisions

Rev.	Date	By	Appr.	Description

Horsley Witten Group, Inc.
Sustainable Environmental Solutions
www.horsleywitten.com
90 Route 6A
Sandwich, MA 02563
508-833-6600 voice
508-833-3150 fax

Date: NOVEMBER 2023 | Designed By: MDL | Drawn By: MCL | Checked By: GK

Plan Set:
HERRING RIVER
CAPE COD BOAT RAMP STORMWATER
RETROFIT PROJECT - PERMITTING PLANS
HARWICH, MA

Plan Title:
SITE & GRADING PLAN

Prepared For:
Town of Harwich
732 Main Street
Harwich, MA
Phone: (508) 430-7514
Fax: —

Survey Provided By:
Horsley Witten Group, Inc.
90 Route 6A
Sandwich, MA 02563
Phone: (508) 833-6600
Fax: (508) 833-3150
Dated: FEBRUARY 7, 2023

Registration:
COMMONWEALTH OF MASSACHUSETTS
RICHARD A. CLAYTOR
CIVIL
NO. 45116
REGISTERED PROFESSIONAL ENGINEER
11-17-2023

Project Number: 22032
Sheet : 4 of 7
Sheet Number: C - 4

last modified: 11/17/23 printed: 11/17/23 by ml H:\Projects\2022\22032 CC Boat Ramp SW Retrofits\Drawings\HERRING RIVER\22032 HERRING RIVER ST.dwg

last modified: 11/17/23 printed: 11/17/23 by ml H:\Projects\2022\22032 CC Boat Ramp SW Retrofits\Drawings\HERRING RIVER\22032 HERRING RIVER DE.dwg

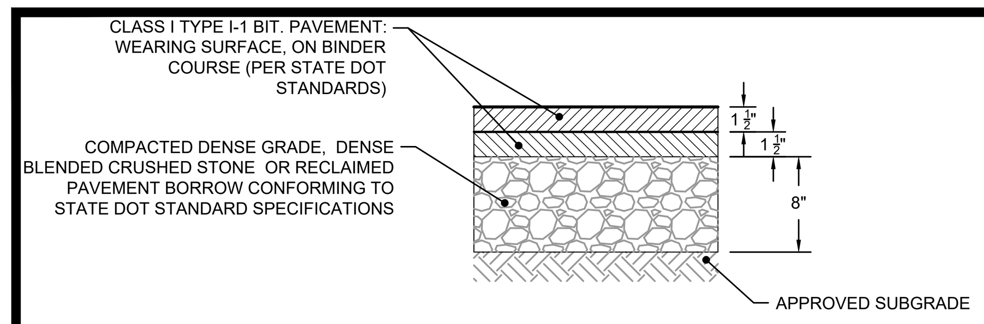

GENERAL NOTES:
1. SUB-GRADE (EXISTING MATERIAL) SHALL CONSIST OF INERT MATERIAL THAT IS HARD, DURABLE STONE AND/OR COARSE SAND, FREE FROM LOAM AND CLAY TO A DEPTH NOT LESS THAN 4-FT BELOW THE FINISH PAVEMENT SURFACE. EXCAVATE SANDY-LOAM AND/OR LOAMY-SAND TOPSOIL MATERIAL FROM ALL PAVED AREAS PRIOR TO SUB-BASE INSTALLATION.
2. PLACE SUB-BASE IN MAXIMUM 8" LIFTS (COMPACTED TO 95%).
3. COMPACT SUB-GRADE FILL TO 95% COMPACTION.
4. SEE SITE LAYOUT PLAN FOR PAVEMENT WIDTH AND LOCATION.
5. SEE GRADING PLANS FOR PAVEMENT SLOPE AND CROSS SLOPE.
6. SWEEP CLEAN THE EXISTING BINDER COURSE SURFACE PRIOR TO INSTALLING THE WEARING COURSE BY A STREET SWEEPING MACHINE .
7. APPLY A TACK COAT PER SPECIFICATIONS.

BITUMINOUS PAVEMENT
NOT TO SCALE

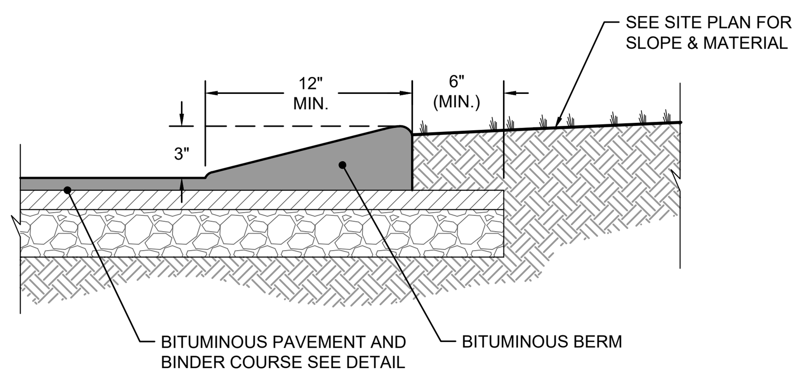

NOTES:
1. BERM TO BE CONSTRUCTED OF BITUMINOUS WEARING SURFACE COURSE AS SHOWN.
2. BERM TO BE CONSTRUCTED INTEGRAL WITH BITUMINOUS WEARING SURFACE.
3. WHEN BERM IS TO BE CONSTRUCTED ON A FRESH LAID BITUMINOUS SURFACE, THAT SURFACE MUST FIRST BE CLEANED.
4. BERM TO BE FOUNDED ENTIRELY ON THE BASE COURSE.
5. FINISH GRADE AT THE BACK OF THE BERM IS TO BE BROUGHT TO THE TOP OF THE BACK EDGE OF BERM.

BITUMINOUS BERM
NOT TO SCALE

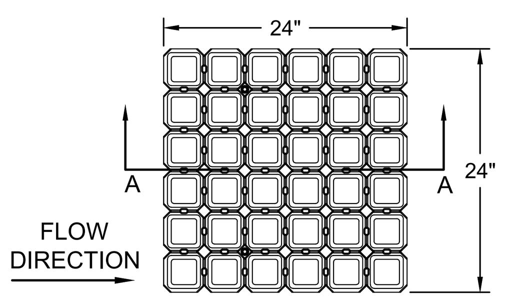

PAVER MAT
PLAN VIEW

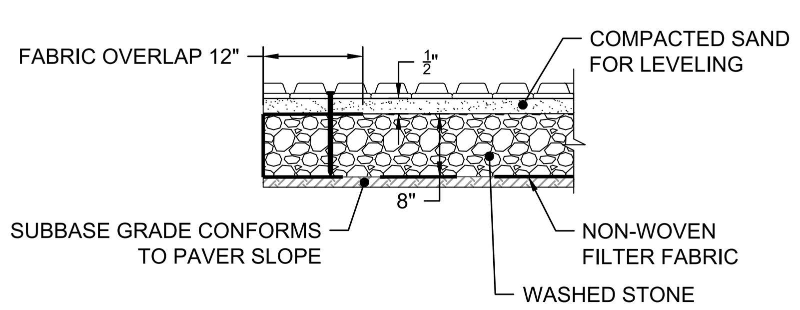

SECTION A-A

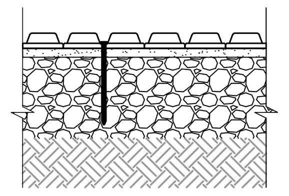

STAKING NOTE: FOR FOREBAY, USE TWO (2) 8" GALV. RING SHANKS (1/4" GAUGE, 9/16" HEAD) PER DRIVABLE GRASS MAT OR ANY CUT MATS ON THE UPSTREAM SIDE OF MAT AT INFLOW.

STAKING DETAIL

NOTES:
1. SEE SPECIFICATIONS FOR ADDITIONAL INFORMATION.
2. REFER TO MANUFACTURERS REQUIREMENTS FOR ADDITIONAL INSTALLATION REQUIREMENTS
3. FILTER FABRIC AROUND PERIMETER AND BOTTOM OF STONE BASE. KEY IN MINIMUM 6".

PLANTABLE CONCRETE PAVERS (SEDIMENT FOREBAY)
NOT TO SCALE

NOTES:
1. EXCAVATE ANY UNSUITABLE, UNSTABLE OR UNCONSOLIDATED MATERIAL FROM SUBGRADE.
2. COMPACT BASE TO TO MANUFACTURER SPECIFICATION.
3. FILL ANY DEPRESSIONS IN BASE WITH BASE MATERIAL.
4. PLACE SETTING BED TO AN EVEN THICKNESS OF 3/4"
5. PLACE BLOCK PAVERS BY HAND IN STRAIGHT COURSES WITH 1/8" TO 3/16" JOINTS AND UNIFORM TOP SURFACES WHILE MAINTAINING PROPER ALIGNMENT AND PATTERN.
6. SWEEP DRY, CLEAN SAND INTO PAVER JOINTS UNTIL FULL. REMOVE EXCESS SAND.

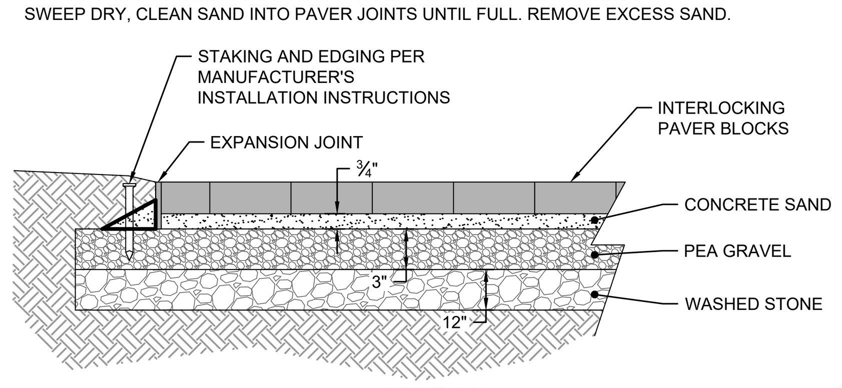

SECTION

PERMEABLE UNIT BLOCK PAVERS (PARKING AREA)
NOT TO SCALE

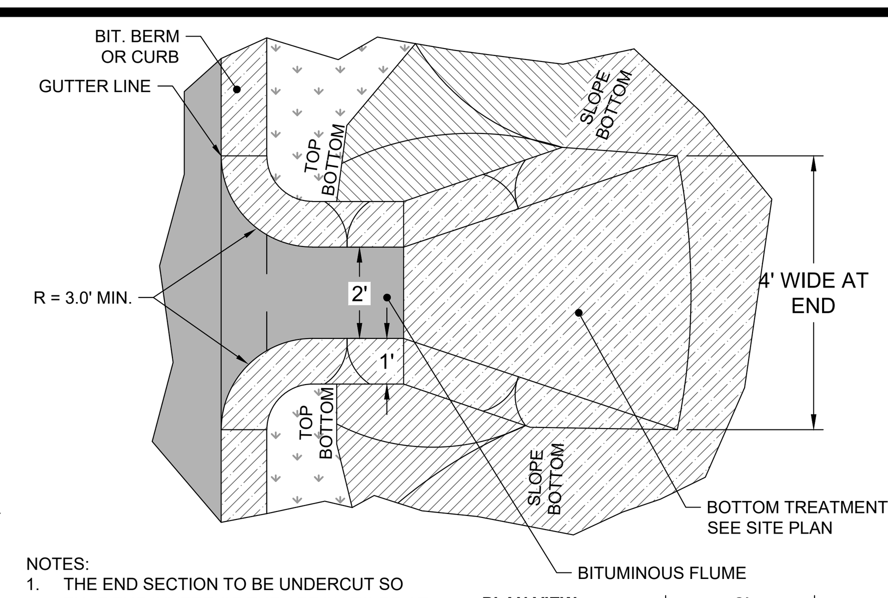

NOTES:
1. THE END SECTION TO BE UNDERCUT SO THAT THE INVERT OF THE APRON TO BE AT THE SAME GRADE (FLUSH) WITH THE SURFACE OF THE RECEIVING CHANNEL.
2. THE WIDTH OF THE END OF THE APRON TO BE EQUAL TO THE BOTTOM WIDTH OF THE RECEIVING CHANNEL. MAXIMUM TAPER TO RECEIVING CHANNEL 5:1.
6. THE GEOTEXTILE FILTER FABRIC TO BE MIRAFI 140N OR EQUIVALENT

PLAN VIEW

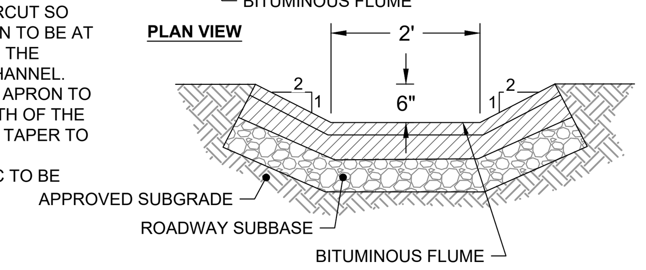

CHANNEL SECTION

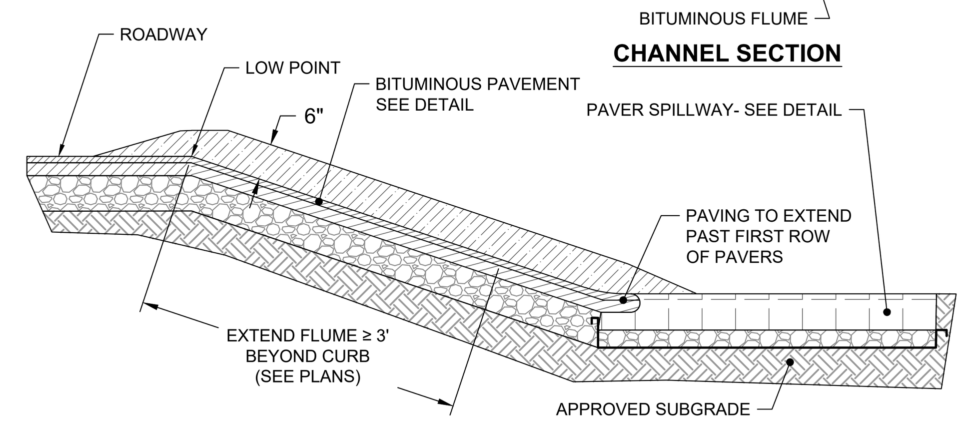

SECTION VIEW

PAVED DRAINAGE FLUME
NOT TO SCALE

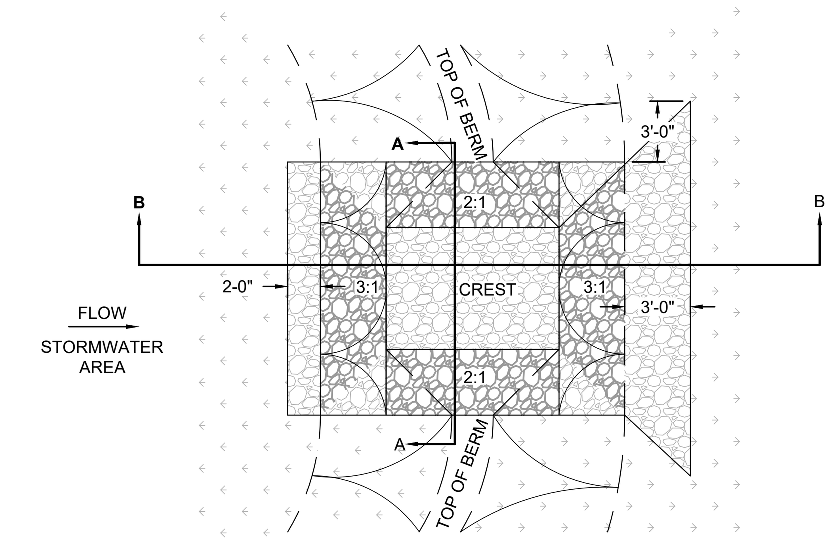

PLAN VIEW

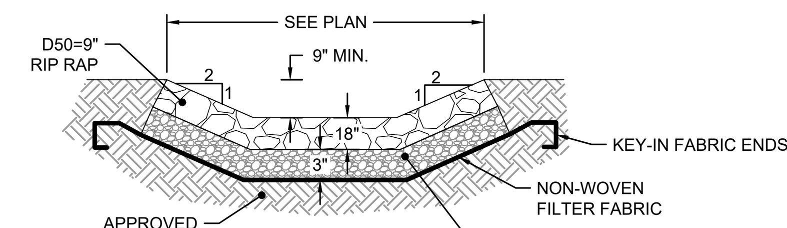

SECTION A-A

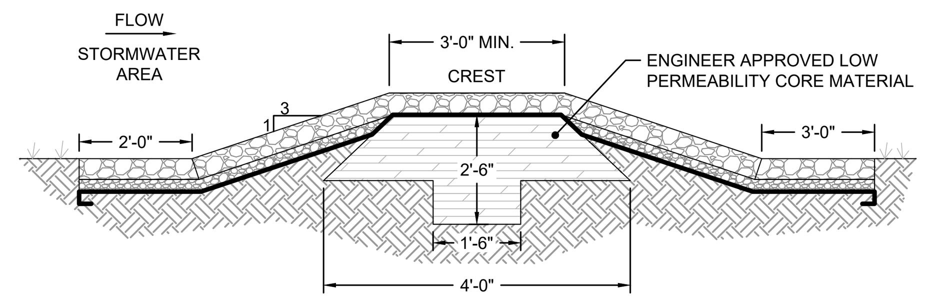

SECTION B-B

OVERFLOW SPILLWAY
NOT TO SCALE

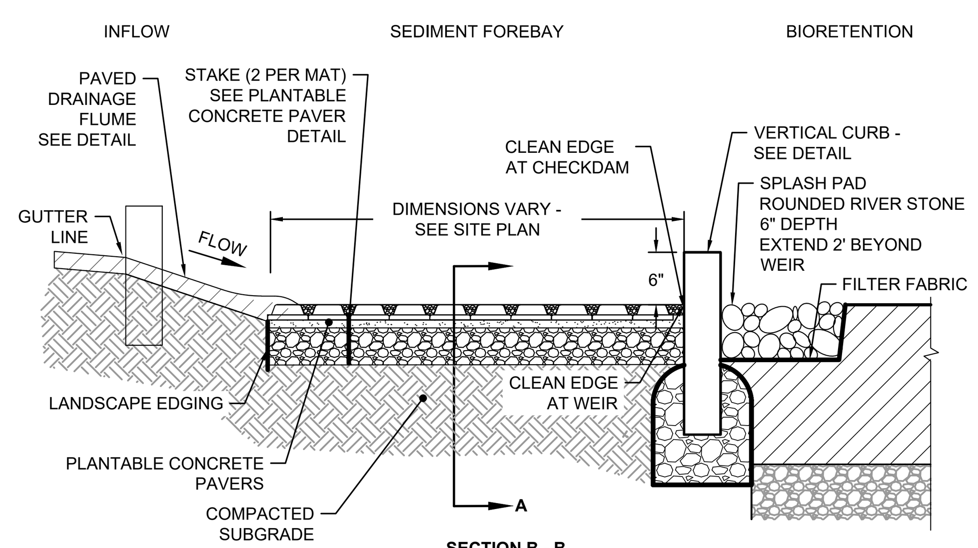

SECTION B - B

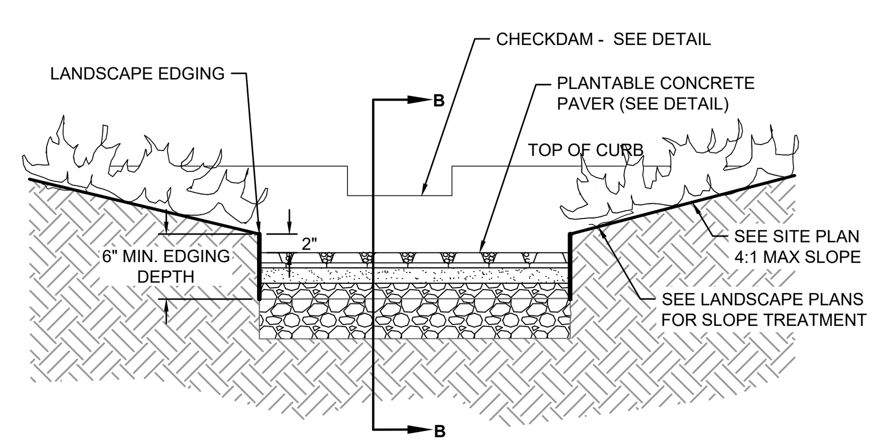

SECTION A - A

NOTES:
1. SEE SPECIFICATIONS FOR PLANTABLE CONCRETE PAVER REQUIREMENTS.
2. INSTALL PLANTABLE CONCRETE PAVER SYSTEM PER MANUFACTURERS REQUIREMENTS.
3. SHAPE FOREBAY AS REQUIRED WITH MIN. 6" SIDE SLOPE DEPTH.
4. LANDSCAPE EDGING: HEAVY DUTY STEEL LANDSCAPE EDGING (1/4" THICKNESS) WITH NATURAL FINISH
5. SEE PLANS FOR DIMENSIONS GRADING AND ELEVATIONS FOR SEDIMENT FOREBAY

SEDIMENT FOREBAY
NOT TO SCALE

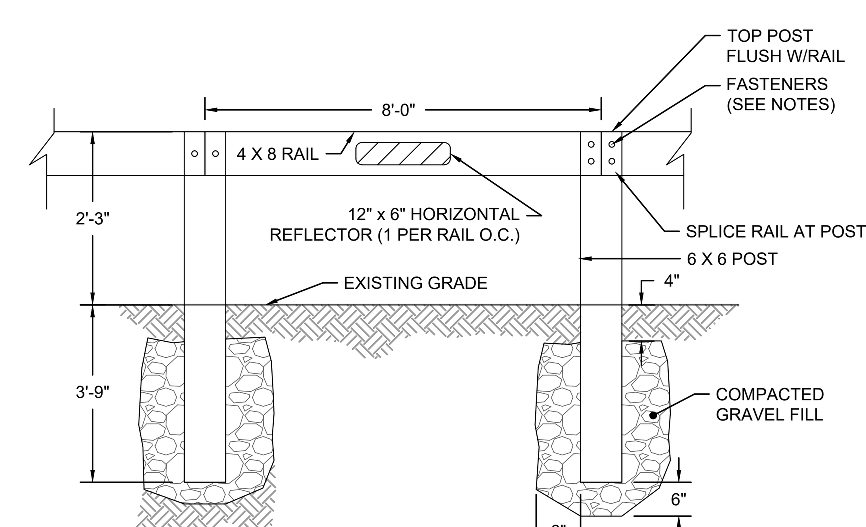

SECTION

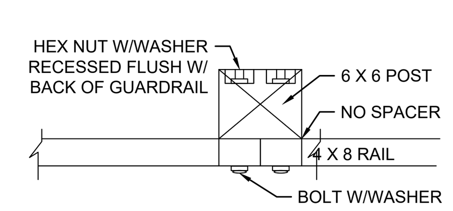

PLAN

NOTES:
1. SEE SPECIFICATIONS FOR ADDITIONAL INFORMATION.
2. POST AND RAILS TO BE PRESSURE TREATED LUMBER
3. ALL SPLICES ARE TO BE MADE AT POSTS.
4. BUMPER ANCHORS TO BE RAIL BOLTS WITH NUTS AND WASHER CONNECTION. FASTENERS TO BE HOT DIPPED GALVANIZED OR STAINLESS STEEL MATCHING ASTM A153 AND ASTM A653.
5. THE CONTRACTOR TO INSTALL EITHER TWO 3/4"Ø BOLTS OR ONE 2"Ø BOLT AT EACH RAIL TO POST CONNECTION.
6. COMPACTED GRAVEL FOOTING TO EXTEND AROUND THE ENTIRE POST.

GUARD RAIL
NOT TO SCALE

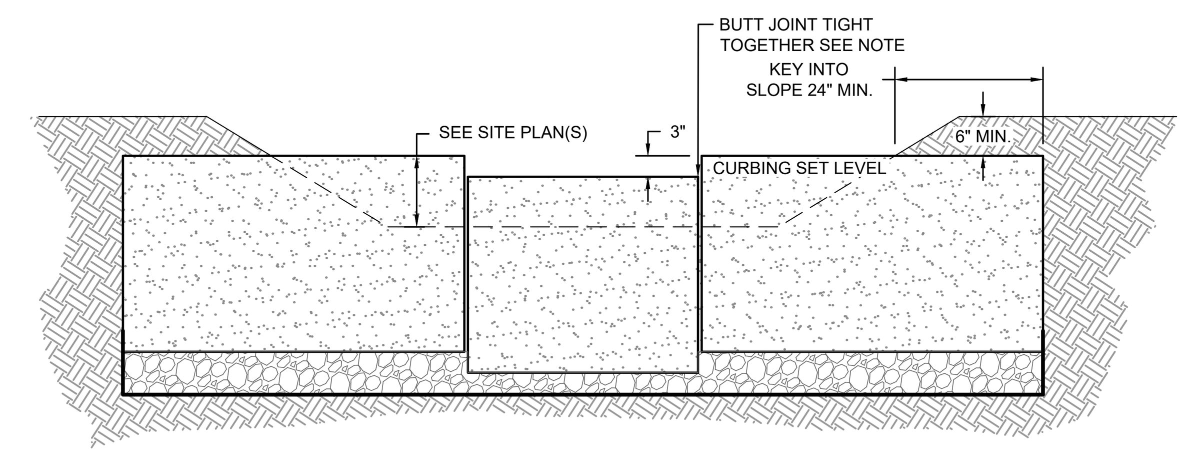

ELEVATION

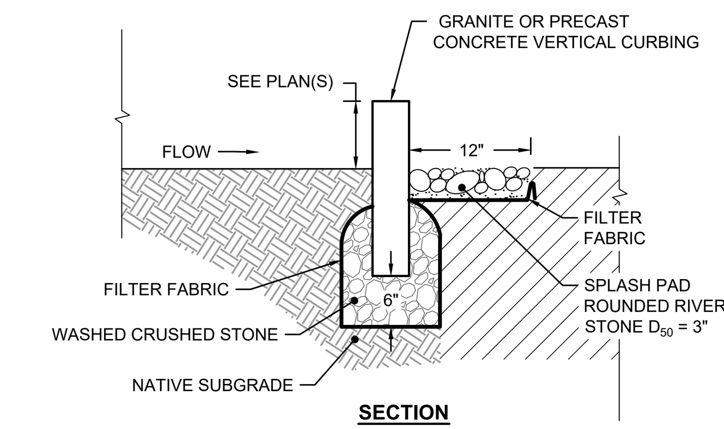

SECTION

NOTES:
1. USE RECYCLED/RECLAIMED GRANITE CURB WHEN POSSIBLE OR BUTT TIGHTLY TO FACE OF GRANITE CURB.
2. KEY CHECKDAM INTO FOREBAY SIDE SLOPES A MINIMUM OF 24" TO PREVENT FLOW FROM DIVERTING THE CHECK DAM.
3. SEE PLAN(S) FOR CHECKDAM DIMENSIONS AND LAYOUT.

CHECKDAM
NOT TO SCALE

NOTES:
1. SEE LANDSCAPE PLANS, DETAILS, AND SPECIFICATIONS.
2. ALL SIDESLOPES MAXIMUM 3:1 UNLESS OTHERWIDE INDICATED.

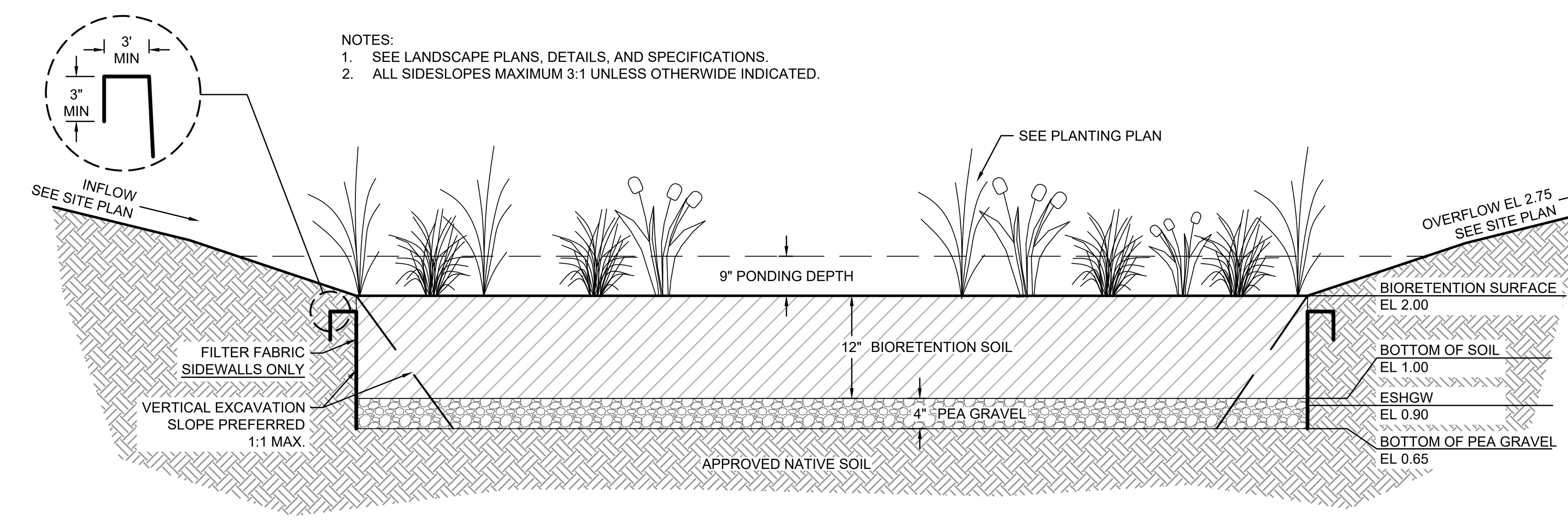

WET BIORETENTION FACILITY
NOT TO SCALE

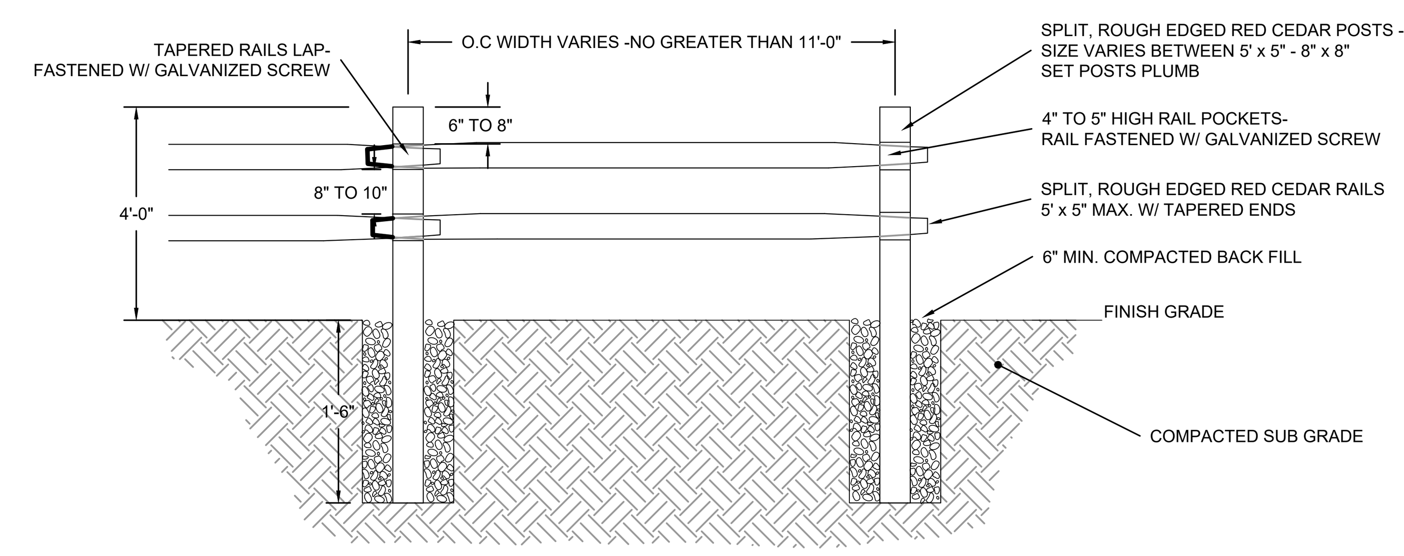

SPLIT RAIL FENCE
NOT TO SCALE

PERMITTING SET ONLY
NOT FOR CONSTRUCTION

Revisions

Rev.	Date	By	Appr.	Description
1	--	--	--	--
2	--	--	--	--
3	--	--	--	--
4	--	--	--	--
5	--	--	--	--
6	--	--	--	--
7	--	--	--	--

Horsley Witten Group, Inc.
Sustainable Environmental Solutions
www.horsleywitten.com
90 Route 6A
Sandwich, MA 02563
508-833-6600 voice
508-833-3150 fax

Date: NOVEMBER 2023 | Designed By: MCL | Drawn By: MCL | Checked By: GK

Plan Set:
HERRING RIVER
CAPE COD BOAT RAMP STORMWATER
RETROFIT PROJECT - PERMITTING PLANS
HARWICH, MA

Plan Title:
DETAILS

Prepared For:
Town of Harwich
732 Main Street
Harwich, MA
Phone: (508) 430-7514
Fax: ----

Survey Provided By:
Horsley Witten Group, Inc.
90 Route 6A
Sandwich, MA 02563
Phone: (508) 833-6600
Fax: (508) 833-3150
Dated: FEBRUARY 7, 2023

Registration:

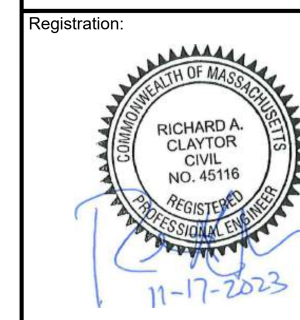

Project Number: 22032
Sheet : 5 of 7
Sheet Number: C - 5

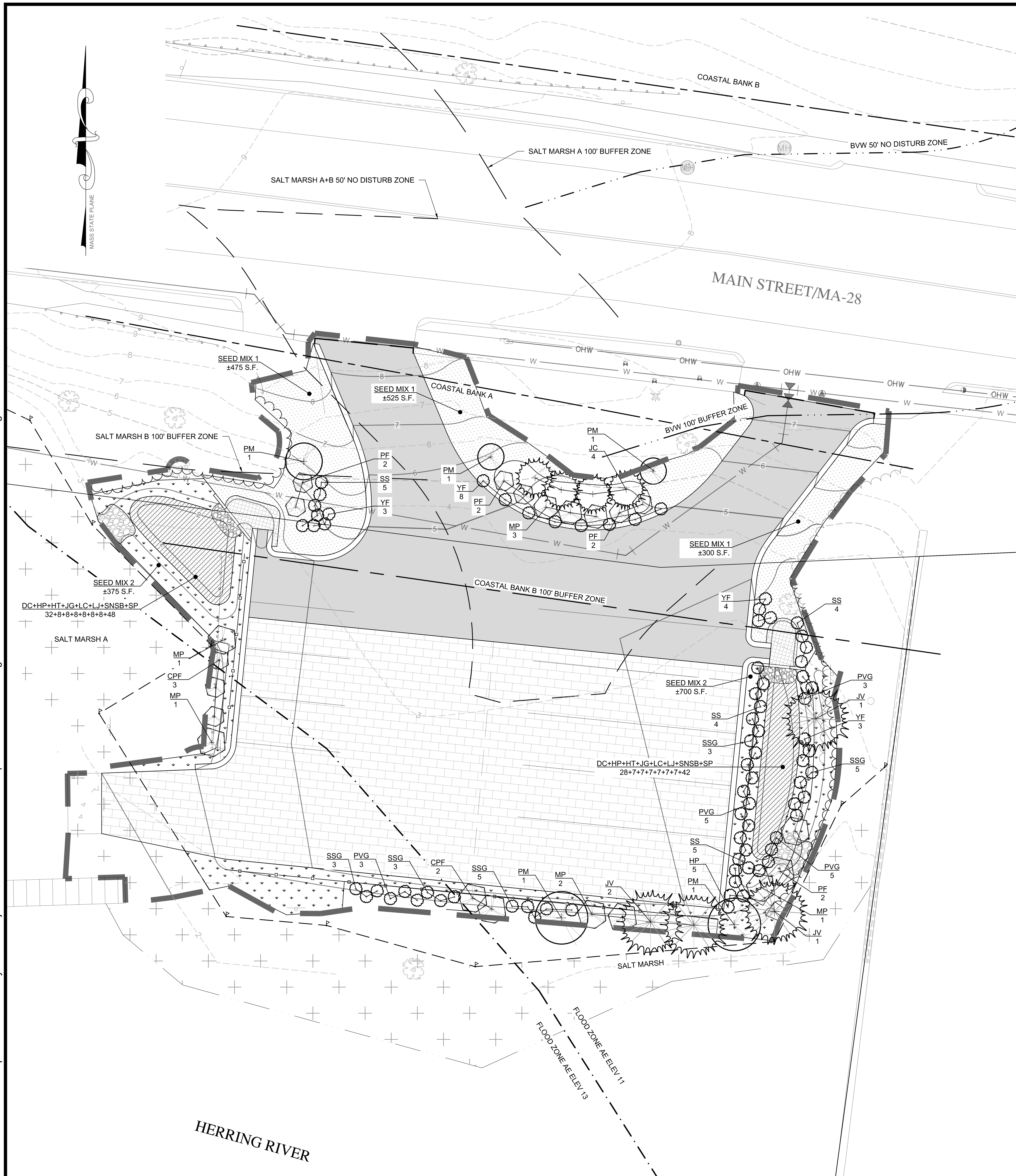

KEY

EVERGREEN TREE

EVERGREEN SHRUB

LARGE SHRUB

DECIDUOUS SHRUB

PERENNIAL

BIORETENTION PLANTING

SEED MIX #1

SEED MIX #2

Master Plant List

Key		Botanical Name	Common Name	Size	Spacing
		Evergreen Trees			
JV	4	*Juniperus virginiana*	Eastern Red Cedar	6/7' B&B	As Shown
		Evergreen Shrubs			
JC	4	*Juniperus communis*	Common Juniper	18-24"	As Shown
		Deciduous Shrubs			
PM	5	*Prunus maritima*	Beach Plum	3/4' B&B	As Shown
CPF	5	*Comptonia peregrina*	Sweet Fern	4" pot	As Shown
MP	8	*Myrica pensylvanica*	Northern Bayberry	#5	As Shown
PF	8	*Potentilla fruticosa*	Potentilla/ Shrubby cinquefoil	#3	As Shown
		Groundcovers/Grasses/Perennials			
DC	60	*Distichlis spicata*	Saltgrass	plugs	12" O.C.
HP	5	*Honckenya peploides*	Seabeach Sandwort	#1	18" O.C.
HT	15	*Hudsonia tomentosa*	Hudsonia	#1	18" O.C.
JG	15	*Juncus gerardi*	Black Grass	#1	12" O.C.
LJ	15	*Lathyrus japonicus*	Beach Pea	#1	24" O.C.
LC	15	*Limonium carolinanum*	Sea Lavender	#1	18" O.C.
PVG	16	*Panicum virgatum*	Switch Grass	#1	18" O.C.
SS	26	*Schizachyrium scoparium*	Little Bluestem	#1	18" O.C.
SSG	19	*Solidago sempervirens*	Seaside Goldenrod	#1	18" O.C.
SNSB	15	*Sorghastrum nutans* 'Sioux Blue'	Sioux Blue Indian Grass	#1	18" O.C.
SP	90	*Spartina patens*	Saltmeadow cordgrass	plugs	18" O.C.
YF	18	*Yucca filamentosa*	Adams Needle Yucca	#3	24" O.C.
		Seed Mixes			
1,300 SF		**SEED MIX #1: Harmony Seed Mix**			
		Deschampsia flexuosa	Coastal/Wavy Hair Grass		
		festuca ovina	Sheep Fescue		
		Festuca x glauca	Blue X Hard Fescue		
		Festuca glauca	Blue Fescue		
		Festuca ovina var. duriuscula	Hard Fescue		
1,075 SF		**SEED MIX #2: New England Wetland Plants Coastal Salt Tolerant Grass Mix**			
		Elymus Canadensis	Canada Wild Rye		
		Festuca rubra	Red Fescue		
		Panicum amarum	Atlantic Coastal Panic Grass		
		Andropogon gerardii	Big Bluestem		
		Sorghastrum nutans	Indian Grass		
		Panicum virgatum	Switch Grass		
		Juncus tenuis	Path Rush		

PLANTING LAYOUT NOTES

1. FOR AREAS WITH MIXED GROUNDCOVERS / GRASSES AND/OR PERENNIALS (SHOWN AS HATCHED AREAS ON PLANS), DO NOT PLANT IN A PATTERN OR WITH LARGE AREAS OF THE SAME SPECIES. RANDOMLY PLANT AS INDICATED ON THE PLANTING PLANS INTO SMALL GROUPINGS OF THE SAME SPECIES TO CREATE A MORE NATURALISTIC APPEARANCE. PLANT THE SAME PLANT SPECIES IN GROUPS OF 3-7 AND NOT LARGER THAN 7, DEPENDING ON THE OVERALL NUMBER OF PLANTINGS.
2. ALL BIORETENTION BASIN PLANTINGS SHALL BE PLANTED WITH A MIX OF GROUNDCOVERS / GRASSES / PERENNIALS AT SPACING SPECIFIED IN THE PLANT LIST.

GRAPHIC SCALE

10 0 5 10 20 40

(in feet)
1 INCH = 10 FEET

last modified: 11/17/23 printed: 11/17/23 by me H:\Projects\2022\22032 CC Boat Ramp SW Retrofits\Drawings\HERRING RIVER\22032 HERRING RIVER LA.dwg

Revisions

Rev.	Date	By	Appr.	Description
1				
2				
3				
4				
5				
6				
7				

Horsley Witten Group, Inc.
Sustainable Environmental Solutions
www.horsleywitten.com
90 Route 6A
Sandwich, MA 02563
508-833-6600 voice
508-833-3150 fax

Date: NOVEMBER 2023
Designed By: KJK/ME
Drawn By: KJK/ME
Checked By: BRK

Plan Set:
HERRING RIVER
CAPE COD BOAT RAMP STORMWATER
RETROFIT PROJECT - PERMITTING PLANS
HARWICH, MA

Plan Title:
PLANTING PLAN

Prepared For:
Town of Harwich
732 Main Street
Harwich, MA
Phone: (508) 430-7514
Fax: ----

Survey Provided By:
Horsley Witten Group, Inc.
90 Route 6A
Sandwich, MA 02563
Phone: (508) 833-6600
Fax: (508) 833-3150
Dated: FEBRUARY 7, 2023

Registration:

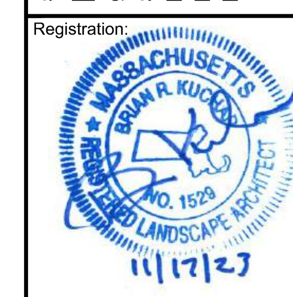

Project Number: 22032
Sheet: 6 of 7
Sheet Number: C - 6

last modified: 11/17/23 printed: 11/17/23 by me H:\Projects\2022\22032 CC Boat Ramp SW Retrofits\Drawings\HERRING RIVER\22032 HERRING RIVER LA.dwg

GENERAL PLANTING NOTES:

1. THE FOLLOWING NOTES ARE PROVIDED AS GENERAL PLANTING GUIDELINES ONLY. THOROUGHLY REVIEW THE PROJECT SPECIFICATIONS FOR ALL LANDSCAPE REQUIREMENTS PRIOR TO THE COMMENCEMENT OF ANY LANDSCAPE WORK. SUBMIT IN WRITING TO THE LANDSCAPE ARCHITECT ANY QUESTIONS OR CLARIFICATIONS REQUIRED AT A MINIMUM OF 30 DAYS PRIOR TO ORDERING ANY MATERIALS OR BEGINNING ANY LANDSCAPE CONSTRUCTION.
2. SUBMIT TO THE LANDSCAPE ARCHITECT FOR REVIEW AND APPROVAL ALL REQUIRED LANDSCAPE SUBMITTALS AS DESCRIBED IN THE SPECIFICATIONS INCLUDING A PLANT LIST WITH PLANT SIZE AND QUANTITIES TO BE ORDERED PRIOR TO DELIVERY TO THE PROJECT SITE.
3. FURNISH AND INSTALL ALL PLANTS AS SHOWN ON THE DRAWINGS AND IN THE SIZE AND QUANTITIES SPECIFIED ON THE PLANTING SCHEDULE. PLANT SUBSTITUTION SELECTION MUST BE APPROVED BY BIOLOGIST OR LANDSCAPE ARCHITECT PRIOR TO INSTALLATION.
4. ALL PLANTS TO COMPLY WITH APPLICABLE REQUIREMENTS OF ANSI Z60.1 "AMERICAN STANDARD FOR NURSERY STOCK." LATEST EDITION, PUBLISHED BY THE AMERICAN NURSERY AND LANDSCAPE ASSOCIATION INC.
5. PLANTS TO BE GROWN UNDER CLIMATIC CONDITIONS SIMILAR TO THOSE IN THE LOCALITY OF THE PROJECT FOR AT LEAST TWO (2) YEARS. USE HEALTHY NURSERY GROWN PLANTS THAT HAVE A WELL DEVELOPED ROOT SYSTEM. PLANTS MUST BE FREE OF DISEASE, INSECTS, EGGS OR LARVAE.
6. INSTALL PLANTS WITHIN ONE (1) WEEK OF PURCHASE. IF PLANTS ARE TO BE STORED AT THE SITE PRIOR TO PLANTING, IT IS THE CONTRACTOR'S RESPONSIBILITY TO ENSURE THEY ARE PROPERLY MAINTAINED, WATERED, AND REMAIN HEALTHY.
7. PROCEED WITH PLANTING ONLY WHEN EXISTING AND FORECASTED WEATHER CONDITIONS PERMIT. SUBMIT TO THE LANDSCAPE ARCHITECT IN WRITING THE PROPOSED PLANTING SCHEDULE. OBTAIN APPROVAL OF PLANTING SCHEDULE FROM THE LANDSCAPE ARCHITECT PRIOR TO PERFORMING ANY WORK.
8. SEASONS FOR PLANTING:

SPRING:	DECIDUOUS:	APRIL 1 TO JUNE 15
	EVERGREEN:	APRIL 1 TO JUNE 15
	PERENNIALS:	APRIL 15 TO JUNE 1
	GROUNDCOVERS:	APRIL 15 TO JUNE 1
FALL:	DECIDUOUS:	SEPTEMBER 15 TO NOVEMBER 15
	EVERGREEN:	SEPTEMBER 15 TO NOVEMBER 15
	PERENNIALS:	SEPTEMBER 15 TO NOVEMBER 15
	GROUNDCOVERS:	SEPTEMBER 15 TO NOVEMBER 15

9. PLANTING UNDER FROZEN CONDITIONS WILL NOT BE PERMITTED. PLANTING BEFORE OR AFTER THE ABOVE REFERENCED PLANTING DATES WILL INCREASE THE LIKELIHOOD OF PLANT ESTABLISHMENT FAILURE. ANY DEVIATION FROM THE ABOVE REFERENCED PLANTING DATES IS UNDERTAKEN AT SOLE RISK OF THE CONTRACTOR AND IT IS THE RESPONSIBILITY OF THE CONTRACTOR TO PROVIDE ANY ADDITIONAL MAINTENANCE AND WATERING WHICH MAY BE REQUIRED TO ENSURE SATISFACTORY PLANT ESTABLISHMENT.
10. FURNISH ONE YEAR MANUFACTURER WARRANTY AND MAINTENANCE FOR TREES, PLANTS, AND GROUND COVER AGAINST DEFECTS INCLUDING DEATH AND UNSATISFACTORY GROWTH. EXCEPTIONS ARE DEFECTS RESULTING FROM ABNORMAL WEATHER CONDITIONS UNUSUAL FOR WARRANTY PERIOD. THE DATE OF FINAL ACCEPTANCE OF ALL COMPLETED PLANTING WORK ESTABLISHES THE END OF INSTALLATION PERIOD AND THE COMMENCEMENT OF THE WARRANTY AND MAINTENANCE PERIOD.
11. ALL TREES WITHIN 5'-0" OF WALKWAYS, SIDEWALKS, AND PARKING LOT TO HAVE A 6'-8" STANDARD BRANCHING HEIGHT.
12. INSPECT ALL AREAS TO BE PLANTED OR SEEDED PRIOR TO STARTING ANY LANDSCAPE WORK. REPORT ANY DEFECTS SUCH AS INCORRECT GRADING, INCORRECT SUBGRADE ELEVATIONS OR DRAINAGE PROBLEMS, ETC. TO THE LANDSCAPE ARCHITECT AND ENGINEER PRIOR TO BEGINNING WORK. COMMENCEMENT OF WORK INDICATES ACCEPTANCE OF SUBGRADE AREAS TO BE PLANTED, AND THE LANDSCAPE CONTRACTOR ASSUMES RESPONSIBILITY FOR ALL LANDSCAPE WORK.
13. PROVIDE PROPER PREPARATION OF ALL PROPOSED PLANTED AND SEEDED AREAS PER THE NOTES AND SPECIFICATIONS.
14. ALL PLANT LAYOUT AND ACTUAL PLANTING LOCATIONS ARE TO BE FIELD VERIFIED BY LANDSCAPE ARCHITECT PRIOR TO PLANTING. NOTIFY THE LANDSCAPE ARCHITECT AT A MINIMUM OF 48 HOURS IN ADVANCE PRIOR TO SCHEDULING ANY FIELD INSPECTIONS.
15. BALL AND BURLAP: REMOVE BURLAP AND WIRE BASKETS FROM TOPS OF BALLS AND FROM TOP HALF OF ROOTBALL AS INDICATED ON DRAWINGS. REMOVE PALLETS, IF ANY, BEFORE SETTING.
16. POTTED PLANTS: REMOVE THE PLANT FROM THE POT AND LOOSEN OR SCORE THE ROOTS BEFORE PLANTING TO PROMOTE OUTWARDS ROOT GROWTH INTO THE SOIL.
17. PLUGS: PLANT UPRIGHT AND NOT AT AN ANGLE. DIG PLANTING HOLES LARGE ENOUGH AND DEEP ENOUGH TO ACCOMMODATE THE ENTIRE ROOT MASS. PLANT PLUGS WITH NO TWISTED OR BALLED ROOTS AND WITH NO ROOTS EXPOSED ABOVE THE GRADE LINE. HAND PACK THE SOIL AROUND THE ENTIRE PLUG ROOT MASS.
18. DIG THE THE PLANTING HOLE TO THE SAME DEPTH AS THE ROOT BALL AND TWO TO THREE TIMES WIDER. SCORE ALL SIDES OF THE HOLE, PLACE THE PLANT IN THE HOLE SO THE TOP OF ROOT BALL IS EVEN WITH SOIL SURFACE. FILL THE HOLE HALFWAY AND THEN ADD WATER ALLOWING IT TO SEEP INTO BACK FILLED MATERIAL. BE SURE TO REMOVE ALL AIR POCKETS FROM BACK FILLED SOIL. DO NOT SPREAD SOIL ON TOP OF THE ROOTBALL. IF SOIL IS EXTREMELY POOR, REPLACE BACK FILL WITH GOOD QUALITY TOP SOIL. AMEND THE SOIL, AS NECESSARY.
19. CREATE A 2" TO 4" BERM AROUND THE EDGE OF PLANTING HOLE WITH REMAINING SOIL TO RETAIN WATER.
20. REMOVE ALL PLANT TAGS AND FLAGS FROM THE PLANTS.
21. MULCH ALL PLANTING BEDS AS INDICATED ON DRAWINGS. UNLESS NOTED OTHERWISE, ALL PLANTS TO RECEIVE 2-3 INCHES OF MULCH. DO NOT PILE OR MOUND MULCH AROUND THE PLANT STEMS OR TRUNK.
22. TRIM BROKEN AND DEAD BRANCHES FROM TREES AND SHRUBS AFTER PLANTING. NEVER CUT A LEADER.
23. THE SITE IS LOCATED ADJACENT TO A WETLAND RESOURCE AREA, THEREFORE, DO NOT USE NITROGEN CONTAINING FERTILIZERS, PESTICIDES OR CHEMICALS DURING PLANTING AND MAINTENANCE OF THE LANDSCAPING OR SEEDING AREAS, UNLESS OTHERWISE APPROVED BY LANDSCAPE ARCHITECT.

GENERAL SEEDING NOTES:

1. SEND A REPRESENTATIVE SAMPLE OF THE TOPSOIL TO A TESTING LABORATORY FOR STANDARD SOIL ANALYSIS AS DESCRIBED IN THE SPECIFICATIONS. SUBMIT TO THE LANDSCAPE ARCHITECT AND ENGINEER TEST RESULTS WITH RECOMMENDED SOIL TREATMENTS TO PROMOTE PLANT AND GRASS GROWTH. CORRECT DEFICIENCIES IN THE LOAM AND STOCKPILED TOPSOIL AS DIRECTED BY THE TESTING AGENCY.
2. ALL AREAS THAT ARE DISTURBED AND/OR GRADED DURING CONSTRUCTION ARE TO BE BROUGHT TO FINISHED GRADE WITH AT LEAST 4" MINIMUM DEPTH OF GOOD QUALITY LOAM AND SEEDED WITH A QUICK GERMINATING GRASS SEED SUCH AS NEW ENGLAND EROSION CONTROL RESTORATION MIX OR AS SPECIFIED ON THE PLANS.
3. PRIOR TO THE PLACEMENT OF TOP SOIL, LOOSEN THE SUBGRADE OF ALL PROPOSED SEEDED AREAS TO A DEPTH OF 6" AND RAKE TO REMOVE STONES LARGER THAN 1 INCH, STICKS, ROOTS, RUBBISH AND OTHER EXTRANEOUS MATTER AND LEGALLY DISPOSE TO AN OFF SITE LOCATION.
4. DO NOT SPREAD TOPSOIL IF THE SUBGRADE IS FROZEN, EXCESSIVELY WET, COMPACTED OR NOT PROPERLY PREPARED PER THE NOTES AND SPECIFICATIONS.
5. SEE SPECIFICATIONS FOR SEASONAL REQUIREMENTS FOR SEEDING.

WATERING NOTES:

1. PROVIDE PROPER PLANT CARE, MAINTENANCE AND WATERING ON SITE UNTIL SUCH TIME AS THE LANDSCAPING IS ACCEPTED BY THE PROPERTY OWNER AS SATISFACTORY PER THE SPECIFICATIONS OR AS DETERMINED BY ANY WRITTEN AGREEMENTS BETWEEN THE CONTRACTOR AND PROPERTY OWNER.
2. ESTABLISH AN APPROPRIATE WATERING SCHEDULE FOR ALL PLANT MATERIAL BASED UPON PLANT SPECIES REQUIREMENTS AND SITE CONDITIONS. PROVIDE SCHEDULE IN WRITING TO THE LANDSCAPE ARCHITECT AND OWNER FOR REVIEW AND APPROVAL. ADHERE TO THE APPROVED SCHEDULE UNTIL PLANTS ARE FULLY ESTABLISHED.
3. AT A MINIMUM THE NEWLY SEEDED AREAS SHOULD BE WATERED DAILY UNTIL ESTABLISHMENT AND THEN 2-3 TIMES A WEEK. SPECIAL CARE SHOULD BE TAKEN TO ENSURE THAT THE SEEDED AREAS ARE NOT SATURATED DURING WATERING. IF AN IRRIGATION SYSTEM IS NOT PROVIDED, A TEMPORARY IRRIGATION SYSTEM OR HANDHELD GARDEN HOSE SHALL BE USED FOR WATERING SEEDED AREAS. THE AREA MUST BE MAINTAINED CONSISTENTLY MOIST FOR THE BEST GERMINATION RESULTS. ADDITIONAL WATERING MAY BE REQUIRED IF PLANTING AND SEEDING OCCUR OUTSIDE OF THE RECOMMENDED PLANTING SEASONS.

PLANTING LAYOUT NOTES

1. FOR AREAS WITH MIXED PERENNIALS AND/OR GRASSES (SHOWN AS HATCHED AREAS ON PLANS), DO NOT PLANT IN A PATTERN OR WITH LARGE AREAS OF THE SAME SPECIES. RANDOMLY PLANT AS INDICATED ON THE PLANTING PLANS INTO SMALL GROUPINGS OF THE SAME SPECIES TO CREATE A MORE NATURALISTIC APPEARANCE. PLANT THE SAME PLANT SPECIES IN GROUPS OF 3-7 AND NOT LARGER THAN 7, DEPENDING ON THE OVERALL NUMBER OF PLANTINGS.

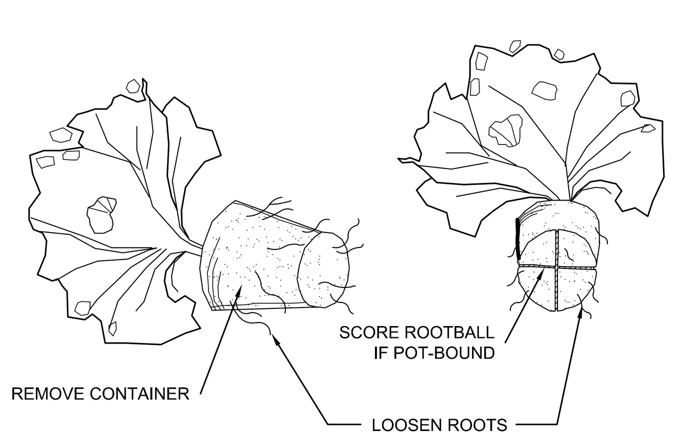

CONTAINER PLANT ROOTBALL TREATMENT
NOT TO SCALE

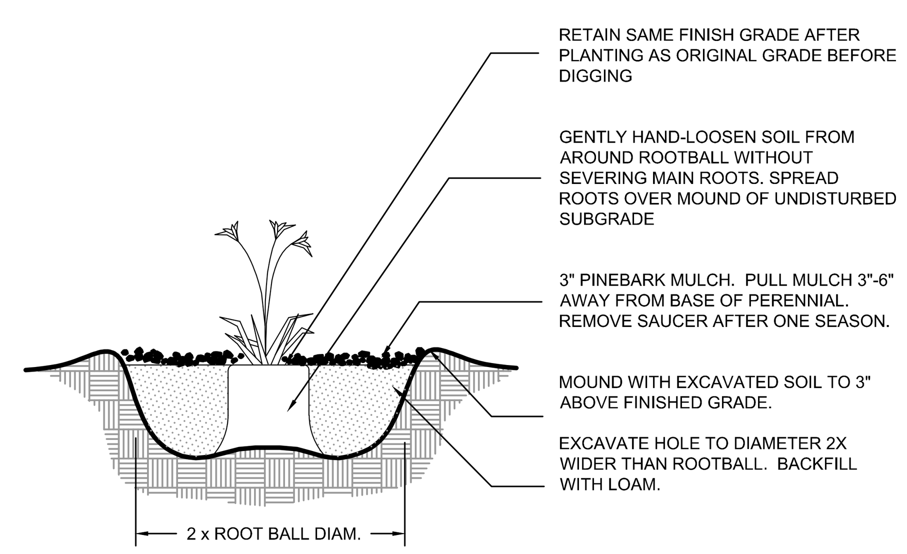

PERENNIAL PLANTING
NOT TO SCALE

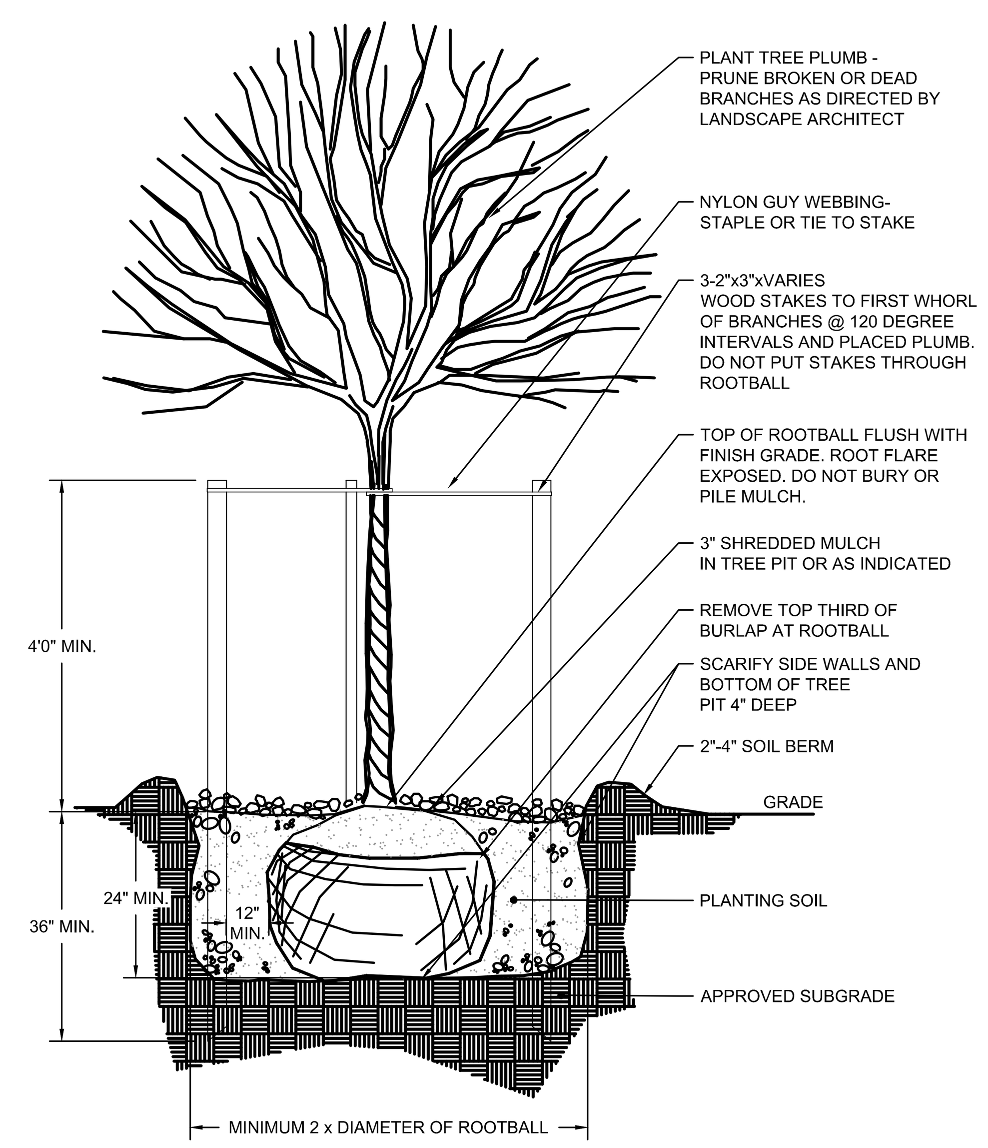

TREE PLANTING
NOT TO SCALE

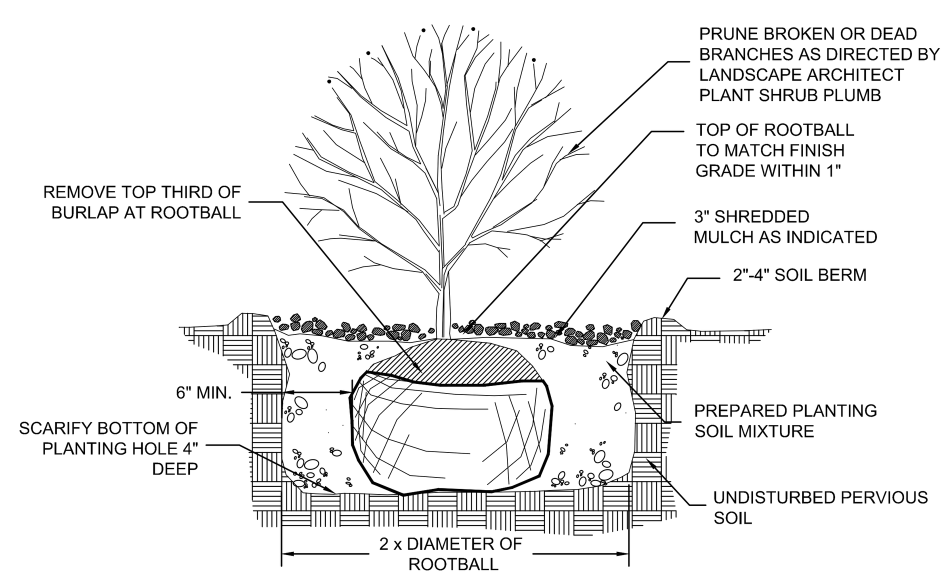

SHRUB PLANTING
NOT TO SCALE

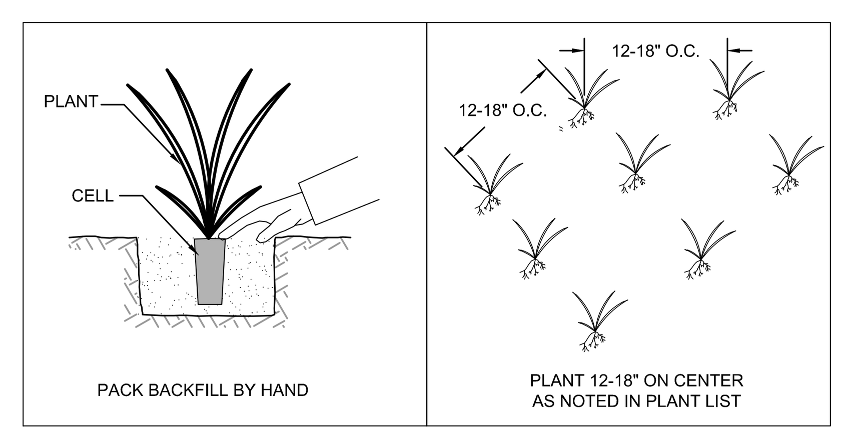

PLUG PLANTING
NOT TO SCALE

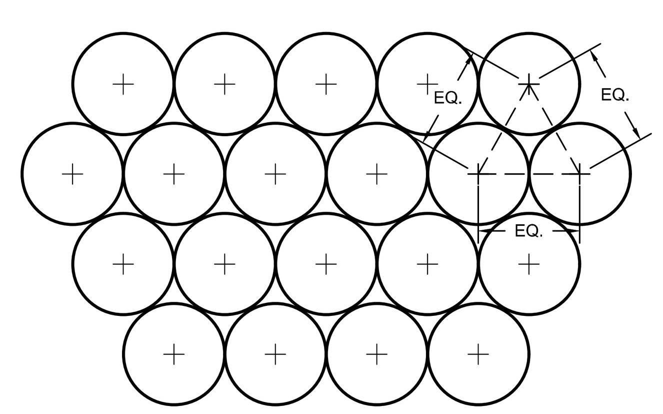

USE EQUIDISTANT TRIANGULAR SPACING FOR PLANTS - FOR ACTUAL SPACING SEE PLANS OR PLANTING SCHEDULE

PLANTING SPACING
NOT TO SCALE

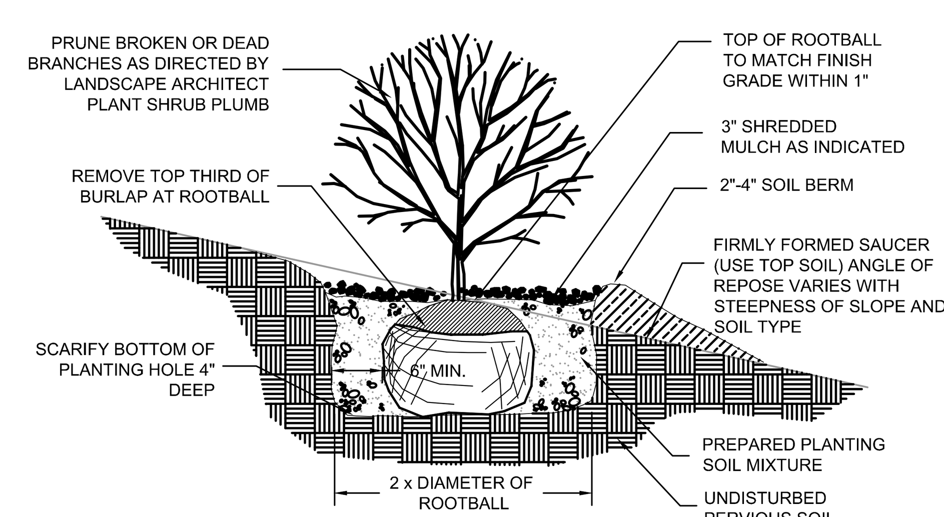

NOTES:
1. PLANTING BACKFILL: 1/3 LOAM, 1/3 SAND, 1/3 PEAT, BY VOLUME.
2. WHEN PLANTING ON SLOPE-MODIFY SLOPE AS SHOWN.

SHRUB PLANTING ON SLOPE
NOT TO SCALE

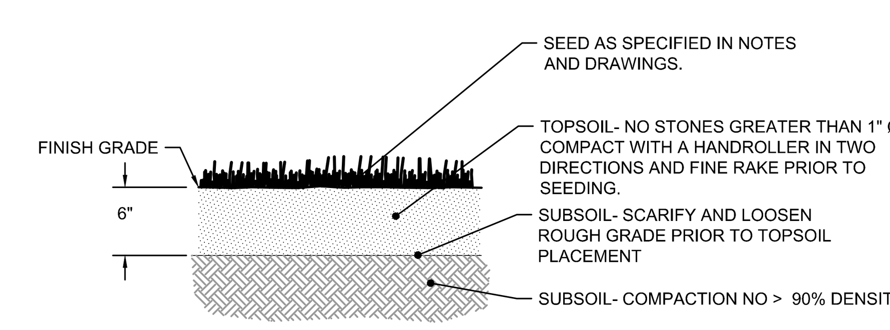

NOTES:
1. SEE LANDSCAPE GRADING SPECIFICATIONS FOR TOPSOIL REQUIREMENTS.
2. CONFIRM SUBGRADES ARE CORRECT AND POSITIVE DRAINAGE IS MAINTAINED PRIOR TO PLACEMENT OF TOPSOIL.
3. NOTIFY ENGINEER/LANDSCAPE ARCHITECT FOR REVIEW OF SUBGRADE PRIOR TO PLACEMENT OF THE TOPSOIL.

LOAM AND SEED
NOT TO SCALE

Revisions

Rev.	Date	By	Appr.	Description
1				
2				
3				
4				
5				
6				
7				

Horsley Witten Group, Inc.
Sustainable Environmental Solutions
www.horsleywitten.com
90 Route 6A
Sandwich, MA 02563
508-833-6600 voice
508-833-3150 fax

Date:	Designed By:	Drawn By:	Checked By:
NOVEMBER 2023	KJK/ME	KJK/ME	BRK

Plan Set:
HERRING RIVER
CAPE COD BOAT RAMP STORMWATER
RETROFIT PROJECT - PERMITTING PLANS
HARWICH, MA

Plan Title:
PLANTING DETAILS

Prepared For:
Town of Harwich
732 Main Street
Harwich, MA
Phone: (508) 430-7514
Fax: ----

Survey Provided By:
Horsley Witten Group, Inc.
90 Route 6A
Sandwich, MA 02563
Phone: (508) 833-6600
Fax: (508) 833-3150
Dated: FEBRUARY 7, 2023

Registration:

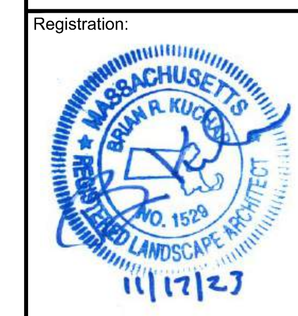

Project Number: 22032
Sheet : 7 of 7
Sheet Number: C - 7